SPA Vympel LLC

OKP 42 1312

Approved
VMPL1.456.005 OM

Ultrasonic Measurement System
Vympel-500

Operating Manual
VMPL1.456.005 OM

Dedovsk, Moscow Region

SPA Vympel LLC
11 Shkolny passage,
Dedovsk,
Istra District, Moscow Region,
143530, Russian Federation
Tel./Fax (495) 992-38-60, 992-38-70
email: dedovsk@npovympel.ru
http://www.vympel.group

TC Vympel LLC
4 Pervy Vrazhsky lane,
Moscow, 119121
Tel./Fax (495) 933-29-39, 935-72-08
email: info@npovympel.ru

Contents

Vympel-500

These Operating Instructions (hereinafter referred to as OI) cover the rules of operation for the high-precision ultrasonic measurement system Vympel-500 (VMPL1.456.005), hereinafter referred to as measurement system, device, unit, and Vympel-500. This device conforms to VMPL1.456.005 TU, Included in this manual is information about the system's configuration, operation (proper usage, maintenance, repairs, storage and transportation), as well as information about the main parameters and characteristics guaranteed by the Manufacturer. A long service life is dependent upon proper operation of the equipment in strict compliance with these Instructions.

To ensure that this device operates correctly, commissioning procedures is only to be performed by Vympel engineers and only under actual operating conditions (pipeline is charged with media being measured at full operating pressure).

Installation, operation and maintenance is only to be performed by personnel that is trained in occupational safety in gerneral and the safe operation of this system specifically, and who have studied the Vympel-500's characteristics, configuration and rules of operation as described in these Instructions.

The manufacturer may, from time to time, make changes to the measurement device that do not impact its metrological characteristics and explosion-proof protection, without amending these OI.

1 Description and operation

1.1 Purpose

1.1.1 The Vympel-500 high-precision ultrasonic system is designed for extremely accurate commercial measurement of the flow rate and volume of natural gas and other gaseous media with reference to standard conditions. The device has four to eight independent chord measurement channels using the "sensor to sensor" configuration (Figure 1). The measurement of the target medium's integral velocity along the chords makes it possible to obtain detailed information about the nature of the flow, taking into account its distribution profile in the transition to the flow rate calculation.

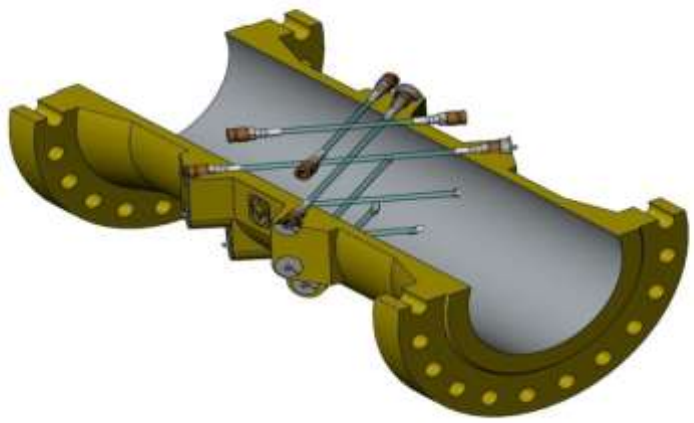

Figure 1 – Measuring scheme of the Vympel-500 ultrasonic measurement system

The measurement system is equipped with the eight-channel electronics module VMPL3.857.001 (Figure 2). The system's software enables the device to display all current measurement data in real-time in a graphical format, as well as diagnostic data on the electronics module's hardware and sensors.

The device is designed for DN 80–1400 pipelines under operating pressures up to 10 MPa (up to 27.5 MPa for customized orders).

The Vympel-500's ultrasonic metering system performs time-pulse measurements. The measuring scheme consists of two measuring sections oriented at 90º/60º to each other, complete with 2 (DN80, DN100) or 4 (DN150 – DN1400) measurement channels in each measuring section (Figure 1). In the 8-channel device, one measuring section is operational and the other is in reserve. If necessary, the second measuring section is used to connect a second electronics module in order to confirm the measurements from the first section. The flow can be measured with reference to the sum of the two measurement sections. Four channels, located along pipeline section chords, make it possible to define the flow profile curve with a high degree of accuracy, even in cases of flow swirl (asymmetric profile).

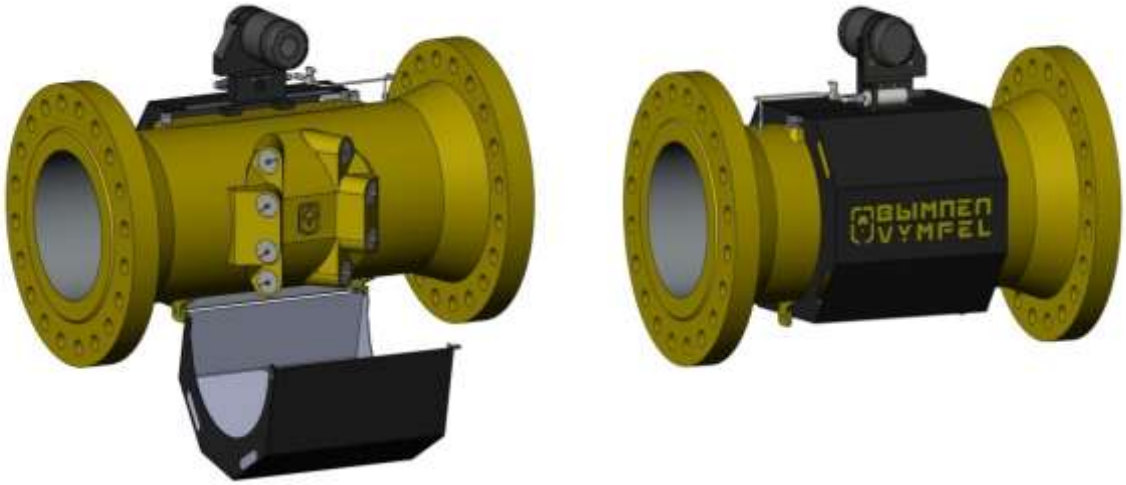

a) **b)**

Figure 2 – Vympel-500 ultrasonic measurement system, version 01, with a flanged measurement section

As an option, the device can be equipped with an additional measurement channel that uses wall reflections to measure contamination of the pipeline's internal surface (Figure 3). The additional channel can have a V-type (single reflection) or W-type (triple reflection) acoustic path.

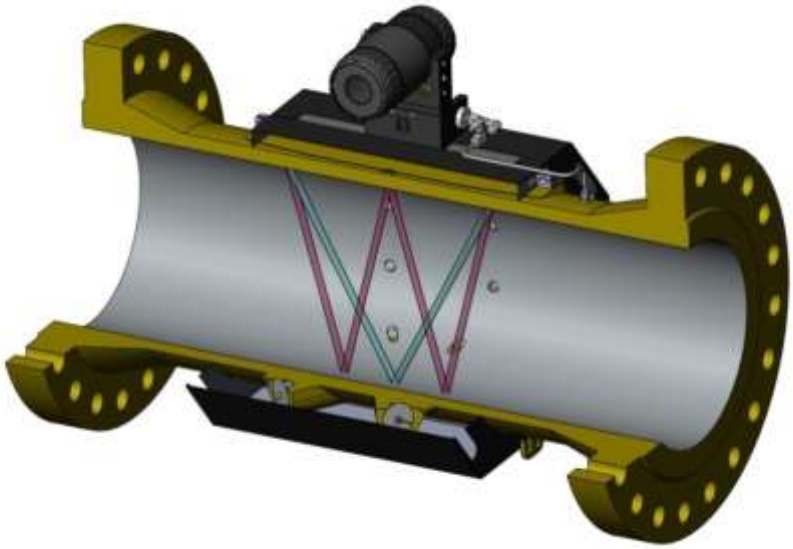

Figure 3 – System with optional pipeline internal surface contamination monitoring function

The device's measurement chamber can be delivered as a forged piece, a forged piece with welded flanges, a pipe with welded angular weldolets for installing piezoelectric transducers, or a cast piece.

This device is designed to monitor and control operational processes (GOST R 52931-2008).

In operational mode measurement is continuous.

1.1.2 The Electronics module VMPL3.857.001, extra pressure detectors DI-017 KRAU5.183.017, KRAU5.183.017-01, KRAU5.183.017-02, KRAU5.183.017-03, absolute pressure detectors DA-018 KRAU5.183.018, KRAU5.183.018-01, KRAU5.183.018-02, KRAU5.183.018-03, absolute pressure detectors DAD-004 VMPL5.183.004, VMPL5.183.004-01, VMPL5.183.004-02, VMPL5.183.004-03, VMPL5.183.004-04, VMPL5.183.004-05, and piezoelectric sensors are tolerant to the following climatic factors:

- Ambient temperature: UKhL1 (from minus 40 to plus 60 ºC);
- Air relative humidity up to 98 % at temperatures up to plus 35 ºC;
- Atmospheric pressure from 84 to 106.7 kPa (or 630 to 800 mm Hg)

1.1.3 The electronics module, extra pressure detectors DI-017, absolute pressure detectors DA-018, DAD-004, and piezoelectric sensors are resistant to mechanical impacts and conform to vibration resistance design N1 in accordance with GOST R 52931-2008.

1.1.4 Ingress protection of the device's integral parts against solid bodies and water (GOST 14254-96 (IEC 529-89)) is not less than:

- electronic module: IP67;
- extra pressure detectors DI-017, absolute pressure detectors DA-018, DAD-004 and piezoelectric sensors: IP67.

The interface unit VMPL3.622.003 and the UPS conform to:

- Group B1 (GOST R 52931-2008) in terms of operating conditions;
- Group L1 (GOST R 52931-2008) in terms of resistance to mechanical impacts;
- IP10 (GOST 14254-96 (IEC 529-89)) in terms of protection level.

1.1.5 For operating pressures up to 27.5 MPa flanged measurement and plane chambers with flanges constructed in accordance with GOST R 54432-2011 (ANSI/ASME B16.5 or ANSI/ASME B16.47) for DN 80…1000 and no-flange measurement chambers DN 800…1400 with bevel edge for butt welding can be customized to order. The flanged measurement sections are complete with additional (counter) flanges to facilitate welding to an operational pipeline. The dimensions and weights of integral components (most common nominal diameters) are not more than those listed in Table 1.

Table 1

Component description and designation	Dimensions in mm, not more than			Weight in kg not more than
	length	diameter/ width	height	
Electronic module VMPL3.857.001	250	207	207	5
Piezoelectric sensor				
FMB80/100 VMPL6.119.111	450	320	470	65
FMB100/20 VMPL6.119.092	450	320	470	80
FMB100/100VMPL6.119.107	450	320	470	85
FMB50/16 VMPL6.119.055	450	320	470	110
FMB150/20 VMPL6.119.094	450	320	470	110
FMB150/100 VMPL6.119.024	450	356	560	180
FMB200/16 VMPL6.119.056	600	356	560	180
FMB200/20 VMPL6.119.096	600	356	560	180
FMB200/100 VMPL6.119.022	600	419	616	270
FMB300/16 VMPL6.119.057	900	419	616	400
FMB300/20 VMPL6.119.098	900	419	616	400
FMB300/100 VMPL6.119.021	900	560	735	450
FMB400/16 VMPL6.119.058	1,200	560	735	450
FMB400/20 VMPL6.119.100	1,200	560	735	450
FMB400/100 VMPL6.119.023	1,200	685	840	740
FMB500/16 VMPL6.119.059	1,500	685	840	500
FMB500/20 VMPL6.119.104	1,500	685	840	500
FMB500/100 VMPL6.119.010	1,500	813	950	1,200
FMB600/16 VMPL6.119.060	1,500	900	1,050	600
FMB600/20 VMPL6.119.105	1,500	900	1,050	600
FMB00/16 VMPL6.119.061	1,500	1,000	1,150	800
FMB700/20 VMPL6.119.106	1500	1,000	1,150	800
FMB700/75 VMPL6.119.067	1500	1,050	1,200	1,100

Table 1 (continued)

Component description and designation	Dimensions in mm, not more than			Weight in kg not more than
	length	diameter/ width	height	
Input straight section 10DN 150/20 VMPL6.457.072	1,500	279	–	60
Input straight section 20DN 150/20 VMPL6.457.077	3,000	279	–	100
Input straight section 10DN 150/100 VMPL6.457.043	1,500	356	–	105
Input straight section 20DN 150/100 VMPL6.457.053	3,000	356	–	145
Output straight section 5DN 150/20 VMPL6.457.082, VMPL6.457.082-01*	750	279	–	40
Output straight section 5DN 150/100 VMPL6.457.047, VMPL6.457.047-01*	750	356	–	85
Input straight section 10DN 200/20 VMPL6.457.073	2,000	343	–	136
Input straight section 20DN 200/20 VMPL6.457.078	4,000	343	–	245
Input straight section 10DN 200/100 VMPL6.457.049	2,000	419	–	205
Input straight section 20DN 200/100 VMPL6.457.054	4,000	419	–	315
Output straight section 5DN 200/20 VMPL6.457.083, VMPL6.457.083-01*	1,000	343	–	86
Output straight section 5DN 200/100 VMPL6.457.050, VMPL6.457.050-01*	1,000	419	–	155
Input straight section 10DN 300/20 VMPL6.457.074	3,000	483	–	212
Input straight section 20DN 300/20 VMPL6.457.079	6,000	483	–	365
Input straight section 10DN 300/100 VMPL6.457.046	3,000	559	–	476
Input straight section 20DN 300/100 VMPL6.457.055	6,000	559	–	785
Output straight section 5DN 300/20 VMPL6.457.084, VMPL6.457.084-01*	1,500	483	–	138
Output straight section 5DN 300/100 VMPL6.457.048, VMPL6.457.048-01*	1,500	559	–	325
Input straight section 10DN 400/20 VMPL6.457.075	4,000	597	–	420
Input straight section 20DN 400/20 VMPL6.457.080	8,000	597	–	740
Input straight section 10DN 400/100 VMPL6.457.044	4,000	686	–	958
Input straight section 20DN 400/100 VMPL6.457.056	8,000	686	–	1,595
Output straight section 5DN 400/20 VMPL6.457.085, VMPL6.457.085-01*	2,000	597	–	263
Output straight section 5DN 400/100 VMPL6.457.045, VMPL6.457.045-01*	2,000	686	–	640
Input straight section 10DN 500/20 VMPL6.457.076	5,000	699	–	680
Input straight section 20DN 500/20 VMPL6.457.081	10,000	699	–	1,230

Table 1 (continued)

Component denomination and designation	Dimensions in mm, not more than			Weight in kg not more than
	length	diameter/ width	height	
1	2	3	4	5
Input straight section 10DN 500/100 VMPL6.457.051	5,000	813	–	1600
Input straight section 20DN 500/100 VMPL6.457.057	10,000	813	–	2740
Output straight section 5DN 500/20 VMPL6.457.086, VMPL6.457.086-01*	2,500	699	–	410
Output straight section 5DN 500/100 VMPL6.457.052, VMPL6.457.052-01*	2,500	813	–	1030
Input straight section 150/20 (with flow conditioner) VMPL6.457.087 / VMPL6.457.087-01**	450/750	279	–	38/45
Input straight section 200/20 (with flow conditioner) VMPL6.457.088 / VMPL6.457.088-01**	600/1,000	343	–	76/98
Input straight section 300/20 (with flow conditioner) VMPL6.457.089 / VMPL6.457.089-01**	900/1,500	483	–	142/172
Input straight section 400/20 (with flow conditioner) VMPL6.457.090 / VMPL6.457.090-01**	1,200/2,000	597	–	262/326
Input straight section 500/20 (with flow conditioner) VMPL6.457.091 / VMPL6.457.091-01**	1,500/2,500	699	–	414/524
Input straight section 150/20 (with flow conditioner) VMPL6.457.062 / VMPL6.457.062-01**	450/750	356	–	85/91
Input straight section 200/100 (with flow conditioner) VMPL6.457.063 / VMPL6.457.063-01**	600/1,000	419	–	142/180
Input straight section 300/100 (with flow conditioner) VMPL6.457.064 / VMPL6.457.064-01**	900/1,500	559	–	295/325
Input straight section 400/100 (with flow conditioner) VMPL6.457.065 / VMPL6.457.065-01**	1,200/2,000	686	–	570/700
Input straight section 500/100 (with flow conditioner) VMPL6.457.066 / VMPL6.457.066-01**	1,500/2,500	813	–	940/1,170
Input straight section 10DN 150/20 (with flow conditioner) VMPL6.457.092	1,500	279	–	68
Input straight section 10DN 200/20 (with flow conditioner) VMPL6.457.093	2,000	343	–	150
Input straight section 10DN 300/20 (with flow conditioner) VMPL6.457.094	3,000	483	–	252
Input straight section 10DN 400/20 (with flow conditioner) VMPL6.457.095	4,000	597	–	486
Input straight section 10DN 500/20 (with flow conditioner) VMPL6.457.096	5,000	699	–	800
Input straight section 10DN 150/100 (with flow conditioner) VMPL6.457.067	1,500	356	–	115
Input straight section 10DN 200/100 (with flow conditioner) VMPL6.457.068	2,000	419	–	220
Input straight section 10DN 300/100 (with flow conditioner) VMPL6.457.069	3,000	559	–	515
Input straight section 10DN 400/100 (with flow conditioner) VMPL6.457.070	4,000	686	–	1,020
Input straight section 10DN 500/100 (with flow conditioner) VMPL6.457.071	5,000	813	–	1,730

Table 1 (continued)

1	2	3	4	5
Absolute pressure detectors DA-018 KRAU5.183.018, KRAU5.183.018-01, KRAU5.183.018-02, KRAU5.183.018-03	167	50	62	1
Absolute pressure detectors DAD-004 VMPL5.183.004, VMPL5.183.004-01, VMPL5.183.004-02, VMPL5.183.004-03, VMPL5.183.004-04, VMPL5.183.004-05	67	41	–	1
Extra pressure detectors DI-017 KRAU5.183.017, KRAU5.183.017-01, KRAU5.183.017-02, KRAU5.183.017-03	168	50	63	1
Interface unit VMPL3.622.003	200	180	75	1
Resistive temperature transducer	In accordance with documentation			
Uninterruptible power supply (UPS)	In accordance with documentation			
*Basic version: with one resistive temperature transducer; Version 01: with two resistive temperature transducers **Basic version: length of straight section is 3D; Version 01: length of straight section is 5D				

1.1.6 Maximum parameter values are to conform with those listed in Table 2.

Table 2

Parameter	Value
Nominal diameter of flanged measurement sections selected	From DN80 to DN1400;
Measured medium	Natural gas, propane, butane and other non-aggressive gases (P_{op} up to 10 MPa)*
Gas flow rate measurement limits, m/s	From 0.3 to 33
Maximum measured pressure, MPa (kgf/cm^2): - absolute DA-018 DAD-004 - extra pressure DI-017	 0.25; 1.0; 3.0; 6.0 (2.5; 10; 30; 60) 0.16; 0.63; 1.6; 4.0; 6.3; 10 (1.6; 6.3; 16; 40; 63; 100) 0.6; 2.5; 6.0; 16.0 (6; 25; 60; 160)
Maximum measured temperature as per GOST 6651-2009 in °C, when using: - platinum TC at R0=100 Ohm, α = 0.00385, °C $^{-1}$ R0=100 Ohm, α = 0.00391, °C $^{-1}$	From minus 40 to plus 70
*Up to 27.5 MPa for a customized order	

1.2 Main parameters

1.2.1 This measurement system is categorized as explosion proof electric equipment as per GOST 30852.0-2002. The measurement device type approval certificate is RU.C.29.004.A No. 58432, the certificate of compliance is ТР ТС 012/2011 RU C-RU.ГБ06.В.00232. The explosion-proof designs for the device's integral parts are:

- **Electronics module** VMPL3.857.001: explosion-proof enclosure Level "d" (GOST 30852.0-2002, GOST 30852.1-2002, GOST 30852.2-2002) and intrinsically safe electrical circuit Level "ia" (GOST 30852.10-2002). Explosion protection marking: **"1Exd[ia]IICT6X",** spark protection is integrated in the electronics module;

- **Piezoelectric sensors:** intrinsically safe electrical circuit Level "ia" (GOST 30852.10-2002). Explosion protection marking: **"1ExiaIICT6X"**;

- **Extra pressure detectors** DI-017 KRAU5.183.017, KRAU5.183.017-01, KRAU5.183.017-02, KRAU5.183.017-03, **absolute pressure detectors** DA-018 KRAU5.183.018, KRAU5.183.018-01, KRAU5.183.018-02, KRAU5.183.018-03, **absolute pressure detectors** DAD-004 VMPL5.183.004, VMPL5.183.004-01, VMPL5.183.004-02, VMPL5.183.004-03, VMPL5.183.004-04, VMPL5.183.004-05: intrinsically safe electrical circuit Level "ia" (GOST 30852.10-2002). Explosion protection marking: **"1ExiaIICT5X"**;

- **Resistive temperature transducer is** simple equipment as defined by GOST 30852.0-2002 and GOST 30852.10-2002;

- **Interface module** VMPL3.622.003 is not explosion proof;

- **UPS** is not explosion proof.

1.2.2 Power supply of explosion proof equipment:

- electronics module VMPL3.857.001 – power is supplied from UPS via interface module VMPL3.622.003, voltage is from 14 to 28 V;

- extra pressure detector DI-017, absolute pressure detector DA-018, and absolute pressure detector DAD-004 – power is supplied from electronics module VMPL3.857.001;

1.2.3 Explosion proof integral parts can be installed in explosion hazard zones of buildings and external plants in accordance with the Electrical Installation Code (section 7.3) and other related regulations.

1.2.4 The galvanically isolated electric circuits of the electronics module VMPL3.857.001, are protected by insulation, relative to each other and relative to the body, that has withstood a test pressure of 500 V for 1 minute under standard conditions, in accordance with GOST R 52931-2008.

The electrical resistance of this insulation is not less than 20 MOhm under standard conditions in accordance with GOST R 52931-2008.

1.2.5 The surface temperature of the electronics module VMPL3.857.001 and other electric elements conforms to temperature class T6 (GOST 30852.0-2002) and does not exceed a maximum of

plus 85 °C.

1.2.6 The device's integral parts provide stable operation from the UPS (after emergency shutdown of the power supply) for up to 40 h (with a standard accumulator battery set).

1.2.7 The calculation of gas flow and volume conforms to GOST 8.611-2013: "State system for ensuring the uniformity of measurements. Flow rate and quantity of gas. Technique (method) measurements by ultrasonic meters".

The measured media is natural gas, propane, butane and other non-aggressive gases with the following characteristics:

- temperature of the measured medium is from minus 40 to plus 70 °C (for natural gas - from minus 23.15 to plus 66.85 °C, when using NX19mod., GERG91mod. and AGA8 methods to determine the medium's physical parameters);

- maximum operating pressure is up to 10 MPa (100 kgf/cm^2), optionally - up to 27.5 MPa (275 kgf/cm^2).

1.2.8 The physical properties of natural gas are calculated in accordance with GOST 30319.1-96, GOST 30319.2-96 and GOST R 8.662-2009 using NX19mod., GERG91mod. and AGA8 methods.

The physical properties of other gases (operating density, adiabatic index, dynamic viscosity) are set using data listed in a table, depending on pressure and temperature. The table values are set in accordance with GSSSD or using certified software designed to calculate the medium's physical properties for the preset operating temperature and pressure range of the measured medium.

The physical properties of gases can also be set using a combined method:

- setting the actual density of the measured medium using external density meter data, and using data taken from a table for the adiabatic index and dynamic viscosity.

1.2.9 The measurement system registers by the minute, and reports an hourly average and a daily average of absolute pressure, as well as operation flow, temperature, medium volume and combustion heat (hereinafter - per minute, hourly and daily data history) plus operator or information system interventions to any of the device's preset parameters (hereinafter - intervention history) and/or built-in volatile memory.

1.2.10 The device automatically registers the time and content of non-routine situations including:

- alteration of preset data that impacts calculation results;
- rate, pressure, and temperature measurement channel failures;
- failures of the piezoelectric sensors;
- alteration of the current rate, pressure and temperature measurement channels, i.e. shifting the device to and from emulation mode; measurement mode;
- pressure deviations outside the pressure detector operating range; restoration of pressure to operating range.

1.2.11 The per minute data history length is not less than 10,080 minutes; the hourly data history is not less than 4,380 h; the daily data history is not less than 730 days; the intervention data history is not less than 3,400 messages; and the non-standard (alarms) data history is not less than 3,400 messages.

The data history and intervention history are to be read using the EIA RS-232 or RS-485 interface.

1.2.12 The measurement system is equipped with a real time clock to:

- track measurements in real time (second, minute, hour, day, month, year);
- measure and calculate all measured medium parameters periodically, within equal time intervals.

1.2.13 The measurement system provides access to configuration procedures, i.e. input of source data for calculations:

- using a PC-compatible process computer via EIA RS-232 or RS-485 interface.

1.2.14 During device configuration, the data shown in Table 3 are entered in the device's non-volatile memory to perform further calculations.

Table 3

Parameter	**Initial data for calculations**
1	2
Measured medium	Gases, including natural gas
Type of resistive temperature transducer used	100P or Pt100
Internal diameter of the measurement pipeline (flanged measurement section) with 0.01 mm increment, mm	From 80 to 1400
Acoustic signal path length with 0.01 mm increment, mm	From 49.00 to 1518.00
Channel decline relative MPF axis, º	45 or 60
Pipeline material	Selected from the available list
Medium physical calculation method*: Natural gas Other gases	 NX19 mod., GERG91 mod., AGA8 Table data
Medium physical parameters: Calculation method: GOST 30319.2-96, GOST P 8.662-2009 Tabular data method	 NX19 mod., GERG91 mod., AGA8 Table data, dimensions 7x7**
Medium density in standard conditions with 0.0001 kg/m^3 increment, kg/m^3	Natural gas from 0.66 to 1.05
Component composition	In accordance with Tables 4 and 5
Medium physical parameters in operating conditions (tabular data) **	Density in operating conditions, dynamic viscosity, adiabatic index

Table 3 (continued)

1	2
Emulation in medium measurement channel with 0.0001 MPa increment (kgf/cm^2), % of scale	0…100
Emulation in temperature channel of measured medium with 0.01 increment, ºC	Natural gas: from minus 24 to plus 67 Other gases: from minus 40 to plus 70
Setting (adjusting) the device's current real time	Year, month, hour, minute, second
Setting device number on the network	From 0 to 15
Frequency output operating range, Hz	From 0 to 1,000
Maximum flow under operating conditions, m^3/h	From 0 to 140,000
Minimum flow under operating conditions, m^3/h	From 0 to 140,000
* Medium physical parameters (density, viscosity and adiabatic index in operating conditions) are determined using GSSSD table data or using certified software for calculating medium physical parameters. ** Component composition for gas condensates, broad fraction of light hydrocarbons and their conversion products per MP-107 — in accordance with Table 4.	

Table 4

#	Components	Chemical formula	#	Components	Chemical formula
1	Methane	CH_4	**12**	N-decane	n-$C_{10}H_{22}$
2	Ethane	C_2H_6	**13**	Nitrogen	N_2
3	Propane	C_3H_8	**14**	Carbon dioxide	CO_2
4	N-butane	n-C_4H_{10}	**15**	Hydrogen sulfide	H_2S
5	I-butane	i-C_4H_{10}	**16**	Hydrogen	H_2
6	N-pentane	n-C_5H_{12}	**17**	Oxygen	O_2
7	I-pentane	i-C_5H_{12}	**18**	Carbon monoxide	CO
8	N-hexane	n-C_6H_{14}	**19**	Water	H_2O
9	N-heptane	n-C_7H_{16}	**20**	Helium	He
10	N-octane	n-C_8H_{18}	**21**	Argon	Ar
11	N-nonane	N-C_9H_{20}	**22**	Residue	

When measuring natural gas flow using the gas compressibility method NX19 mod, GERG91 mod, the following additional parameters (see Table 5) shall be preset. When calculating the compressibility ratio using the AGA8 method, the gas component composition shall be preset in accordance with GOST R 8.662-2009.

Table 5

Component	Setting range
Nitrogen	From 0 to 0.15 mole fraction
Carbon dioxide	From 0 to 0.15 mole fraction
Natural gas density in standard conditions	From 0.66 to 1.05 kg/m^3

1.2.15 Configured as per the customer's order or by means of a test example, the system, performs the input and output of digital data (measured pressure, temperature, flow, medium volume):

- to the built-in electronic indicator module;
- to external devices via communication lines.

1.2.15.1 The built-in electronics module indicator displays the following parameters:

- extra (absolute) pressure, MPa (kgf/cm^2);
- measured medium temperature, °C;
- instantaneous flow of the measured medium under operating conditions, m^3/h;
- progressive total of the medium volume under operating conditions, m^3;
- instantaneous flow of the measured medium reduced to standard conditions, m^3/h;
- progressive total of the medium volume reduced to standard conditions, m^3;
- medium volume for the last full hour under operating conditions, m^3;
- medium volume for the last full hour reduced to standard conditions, m^3;
- medium volume for the last full day under operating conditions, m^3;
- medium volume for the last full day reduced to standard conditions, m^3;
- current date and time: year, month, day, hour, minute, second;
- error codes.

1.2.16 Data exchange between the system and process computer and/or STM is through an RS-485 connection via an VMPL3.622.003 interface unit.

The VMPL3.622.003 interface unit is used to connect at least two independent interrogator devices or systems (for example: a process computer and a telemechanics system) that can simultaneously interrogate the Vympel-500 ultrasonic measurement system electronics module VMPL3.857.001 and obtain information in real-time, without any additional formal and physical activities (re-connection of cables, connectors, re-programming of devices, etc.).

Based on the Customer's specifications, the VMPL3.622.003 interface unit can be equipped with a GSM modem to provide an additional cellular interrogation channel for the VMPL3.857.001 electronics module.

The parameters for the communication line connecting the system to external devices shall comply with standard (GOST R 52931-2008) operating conditions:

- the communication line between the interface module and the system measurement chamber shall not exceed 1,000 m;
- communication line inductance shall be not more than 0.5 mH;
- communication line capacitance shall be not more than 0.5 mcF;
- insulation resistance of cable conductors shall be not less than 20 MOhm;
- insulation resistance between cable conductors and braid shielding shall be not less than 20 MOhm;
- cable conductor DC resistivity shall not exceed 12 Ohm per 1 km.

1.3 Technical characteristics

1.3.1 The measured maximum and minimum flow velocity (section averaging) shall conform to the values shown in Table 6, depending on the measurment pipeline nominal diameter.

Table 6

Flow velocity, m/s	Nominal diameter, DN													
	80	**100**	**150**	**200**	**300**	**400**	**500**	**600**	**700**	**800**	**900**	**1000**	**1200**	**1400**
Vmax	33	33	33	33	33	33	33	33	33	25	25	25	25	25
Vmin	0.7	0.5	0.3	0.3	0.3	0.3	0.3	0.3	0.3	0.3	0.3	0.3	0.3	0.3
Vmin/Vmax	1/47	1/66	1/100	1/100	1/100	1/100	1/100	1/100	1/100	1/83	1/83	1/83	1/83	1/83

1.3.2 The measured maximum operating gas flow Q_{max}, depending on the nominal diameter of the measurement pipeline (corresponding to maximum velocity) is shown in Table 7.

Table 7

Nominal diameter, DN													
80	100	150	200	300	400	500	600	700	800	900	1000	1200	1400
Maximum operating flow, m^3/h													
626	978	2200	3600	8200	12900	20600	31000	42000	43005	54739	67886	98422	134614

1.3.3 The measured minimum operating gas flow Q_{min}, depending on the nominal diameter of the measurement pipeline (corresponding to minimum velocity) is shown in Table 8. The system threshold sensitivity does not exceed 0.1 Q_{min}.

Table 8

Nominal diameter, DN													
80	100	150	200	300	400	500	600	700	800	900	1000	1200	1400
Minimum operating flow, m^3/h													
13	15	30	50	75	110	190	290	400	516	656	814	1181	1615

1.3.4 The limits of the main permissible relative and reduced measurement error for measurements of pressure in the extra (absolute) pressure channel (detector) for all design options for detector accuracy in the operating temperature range do not exceed the values in Table 9.

Table 9

Pressure detector accuracy	**Limits of the main reduced measurement error for measurements of extra* (absolute**) pressure, %**	**Limits of the main relative measurement error for measurements of extra* (absolute**) pressure, %**
C	$\pm(0.01+0.1(P/P_{max}))$	$\pm(0.1+0.01(P_{max}/P))$
A	$\pm(0.01+0.2(P/P_{max}))$	$\pm(0.2+0.01(P_{max}/P))$
B	$\pm(0.015+0.2(P/P_{max}))$	$\pm(0.2+0.015(P_{max}/P))$
*For extra pressure measurement range from 1 to 100 % of detector DI-017 scale. **For absolute pressure measurement range from 0.05 MPa to 100 % of detectors DA-018, DAD-004 scale.		

1.3.5 When converting the thermal converter input resistance to temperature, the permissible absolute error limit is ±0.05 °C. The primary thermal converter error shall be determined as per GOST

6651-2009.

The permissible temperature range for medium measurement is from minus 40 to plus 70 °C; optionally (for a customized order) — from minus 50 to plus 70 °C (for natural gas from minus 23.15 °C to plus 66.85 °C).

1.3.6 The relative error when calculating gas flow and volume reduced to standard conditions is not more than ±0.01 %.

1.3.7 The absolute zero error under zero flow is not more than 0.02·Qmin.

1.3.8 Permissible measurement error limits for gas flow and volume (operating conditions), depend on designed-in accuracy option and correspond to the values listed in Table 10 (in %).

Table 10

Designed-in accuracy option	**A**	**B**	**C**
Flow from Qmin to 0.05 Qmax	±1.0	±1.0	±1.0
Flow from 0.05 Qmax to Qmax	±0.3	±0.5	±0.7

Permissible relative measurement error limits for gas flow and volume measurements (reduced to standard conditions), without consideration of factors that determine physical and chemical properties of the medium, depend on the designed-in accuracy option and correspond to the values listed in Table 11 (in %).

Table 11

Designed-in accuracy option	**A**	**B**	**C**
Flow from Qmin to 0.05 Qmax	±1.1	±1.1	±1.1
Flow from 0.05 Qmax to Qmax	±0.4	±0.6	±0.8

1.3.9 A straight section not less than 10 DN upstream of the measurement chamber is necessary in order to achieve the listed accuracy values.

1.3.10 The measurement system includes a galvanically isolated frequency output (optical output with open collector). The open collector's maximum permissible voltage is not more than 30 V, maximum current is not more than 10 mA. The operating frequency range is 0…1000 Hz.

The relative error in the frequency signal for flow conversion is not more than 0.02 %.

The flow under operating conditions $Q_{p.y.}$, m^3/h, depending on the measured frequency, is determined by the following formula:

$$Q_{p.y.} = (F \cdot Q_{\max})/1000, \quad (1)$$

where F is the frequency at the frequency output in Hz;

Q_{max} is the maximum flow under operating conditions (set during the configuration process) measured in m^3/h (this corresponds to the frequency value at frequency output 1000 Hz).

The measurement system displays the above shown metrological characteristics 30 minutes after switching on.

1.3.11 The average mean time before failure of the Vympel-500

is not less than 65,000 h.

The calibration test interval is 4 years.

1.4 System configuration

1.4.1 System configuration is shown in Table 12.

Table 12

Name, type	Designation of component	Qty	Note
1	2	3	4
VMPL3.857.001 electronics module	VMPL5.857.001	1 or 2 pcs	In accordance with the configuration data sheet
Piezoelectric sensor		8 or 16 pcs (+2)	(+2) with add. channel design version
Overpressure detector DI-017 Absolute pressure detector DA-018 Absolute pressure detector DAD-004	KRAU5.183.017 KRAU5.183.017-01 KRAU5.183.017-02 KRAU5.183.017-03 KRAU5.183.018 KRAU5.183.018-01 KRAU5.183.018-02 KRAU5.183.018-03 VMPL5.183.004 VMPL5.183.004-01 VMPL5.183.004-02 VMPL5.183.004-03 VMPL5.183.004-04 VMPL5.183.004-05	1 pc	Detector type and model in accordance with the configuration data sheet

Name, type	Designation of component	Qty	Note
Submerged resistive temperature transducer or Body-mounted resistive temperature transducer	TPT-1-1-100P or TSP-011	1 pc	In accordance with the configuration data sheet
Resistive temperature transducer connection cable	KRAU4.841.026	1 pc	Included in the 5DN direct output section delivery kit
Piezoelectric sensor connection cables (from MPF accessories kit)	VMPL4.078.053 VMPL4.078.052 VMPL4.078.051 VMPL4.078.050 VMPL4.078.039 VMPL4.078.102 VMPL4.078.103	1 kit	MPF150 MPF200 MPF300 MPF400 MPF500 MPF600 MPF700
Interfacing module	VMPL3.622.003	1 pc	In accordance with the configuration data sheet
UPS PS2405D *	–	1 pc	In accordance with the configuration data sheet
Flanged measurement body (c/w enclosure)	See Table 1	1 or 2	In accordance with the configuration data sheet
Input straight section 10DN or Input straight section 10 DN with flow conditioner or Input straight section 20DN or Two input straight sections (10DN or 20DN + 3DN or 5DN with flow conditioner)	See Table 1	1 pc	In accordance with the configuration data sheet
Output straight section 5DN (with one or two thermal converters)	See Table 1	1 pc	In accordance with the configuration data sheet
System accessories	VMPL4.078.034	1 kit	
Uniterm software on CD-R	VMPL1.456.005 D20	1 pc	
Operating Instructions	VMPL1.456.005 RE	1	
Record sheet	VMPL1.456.005 FO	1	
Calibration method	VMPL1.456.005 MP	1	In accordance with the configuration data sheet
Quality certificates for materials and accessories Weld test reports Hydraulic test reports MPF geometric characteristics measurement report Straight section (pipe) geometric characteristics measurement report		1 kit	

Name, type	Designation of component	Qty	Note
* Can be replaced by a UPS with similar parameters (24 V, not less than 15 W).			

Subject to Customer approval, 1 copy of VMPL1.456.005 RE can be attached to one transport container shipped to one destination; a specific note shall be made in the shipping documentation.

1.4.2 System upgrades may depend on the specifics of the system design features, however, upgrades will neither impact main operation characteristics nor the degree of explosion-proof conformity.

1.4.3 All changes to the delivery set are indicated on the Form: VMPL1.456.005 FO and are marked as approved with a QC department stamp. Reference designations and a configuration data sheet are presented in Appendix A.

1.5 System configuration and operation

1.5.1 The system's operating principle puts it in the category of time-pulse ultrasonic flow transducers. Its operation is based on measuring the difference of the transit time of ultrasonic pulses propagating in and against the direction of the gas flow. Piezoelectric sensors on the primary flow transducers excite and receive sounding pulses. The electronic module alternates reception and transmission modes of the paired sensors.

Ultrasonic wave deflection during gas flow results in a change in the ultrasonic signal propagation period between the sensors. The signal propagation time reduces along the flow, and increases against the flow.

1.5.2 Vympel-500 ultrasonic measurement system is equipped with two measurement planes with four (DN 150–1400) and two (DN 80–100) measurement channels in each plane (Figure 4). If necessary, the second measurement plane (DN 150–1400) can be used to connect the second electronics module to back up readings from the first meter.

Four channels located along pipeline section chords make it possible to define the flow profile curve with due accuracy, even in case of flow swirl (asymmetric profile).

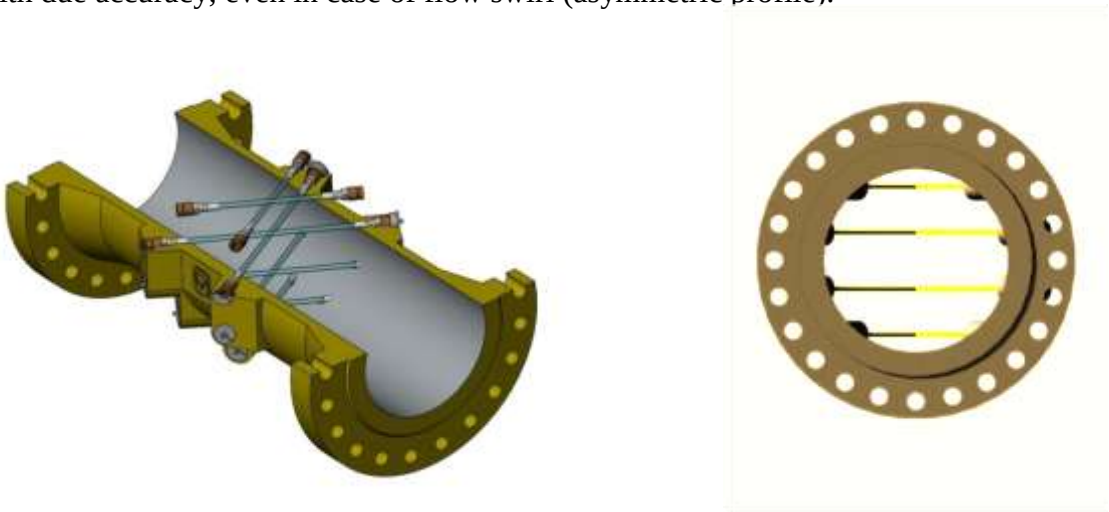

Figure 4 – Measuring scheme of the Vympel-500 ultrasonic measurement system

1.5.2.1 The propagation speed (υ) of the ultrasonic signal in gas, which is flowing through a pipeleine, is a vector sum of ultra sound speed in a motionless gas environment and gas flow speed.

The acoustic signal propagation times from DPE1 to DPE2 and from DPE2 to DPE1 along

channel *i* are:

$$\square_{12} = \frac{\square_{\square}}{\square + \square_{\square}\square\square\square\square_{\square}}; \quad (2)$$

$$\square_{21} = \frac{\square_{\square}}{\square - \square_{\square}\square\square\square\square_{\square}}, \quad (3)$$

where $\square_{\square}$ is the acoustic signal length (i=1..4), C is the sound speed, and $\square$ is the angle between the measurement section axis and beam *i*.

The speed along channel *i* is:

$$\square_{\square} = \frac{\square_{\square}}{2\square\square\square\square_{\square}} \left(\frac{1}{\square_{12}} - \frac{1}{\square_{21}}\right) \quad (4)$$

Sound velocity:

$$\square = \frac{\square_{\square}}{2\square\square\square\square_{\square}} \left(\frac{1}{\square_{12}} + \frac{1}{\square_{21}}\right) \quad (5)$$

The acoustic path length *Li* $L_i$is calculated by subtracting the sensor length from the sensor-to-sensor distance in the measurement chamber:

$$\square_{\square} = \square_{\text{изм}} - \square_{\text{ДПЭ1}} - \square_{\text{ДПЭ2}} \quad (6)$$

The last 100 measurement results (beam velocity and measurement status) are saved in the medium-value memory. The average beam velocity is the average of all actual measured values saved in the memory:

$$\square_{cp\square} = \frac{\sum_{\text{действ}} \square_{\square}}{\square_{\text{действ}}} \quad (7)$$

The percentage of actual measurements $\square_{\text{действ}}$ serves as rejection criteria for a given measurement channel (criteria factory setting: $\square_{\text{действ}} \geq 95$)

The average flow speed is the weighted average value for the sum of the speed of all four channels:

$$\square_{\square} = \sum_{\square=1}^{4} \square_{\square}\square_{cp\square} \quad (8)$$

where $\square_{\square}$ are weight coefficients.

The volume flow rate under operating conditions, measured in m^3/h, is calculated using the following formula:

$$\square_{\square\ \text{раб}} = \square\square_{\square}, \square = \frac{\square\square^2}{4} \quad (9)$$

where S is the pipeline section area m^2;
d is the measurement pipe (section) diameter m.

1.5.2.2 The system operation principle in reduced volume measurement mode

The gas volume flow, reduced to standard conditions, $\square_{ст}$ m^3/h, shall be determined by the measured volume flow and adjusted with reference to pressure and temperature values and compressibility coefficient:

$$\square_{ст} = \frac{\square\square_{корр}\square\square_{ст}}{\square_{сж}\square_{ст}\square}, \text{ where} \quad (10)$$

P and T are measured pressure and temperature data under operating conditions;
P_{st} and T_{st} are pressure and temperature under standard conditions;
K_{compr} is the gas compressibility coefficient.

The gas reduced volume V_n, in m^3/h, which passes through the pipeline within the specific period of time (τ) can be determined using the following formula:

$$\square_{н} = \Delta\square\sum_{\square=1}^{\square}\square_{н\square}, \quad (11)$$

$$\Delta\tau = (\tau_н - \tau_к)/n; \quad (12)$$

n is the discrete interval number within a specific time period ($\tau_n - \tau_{compr}$).
Standard conditions of the gas volume under operating conditions are as follows:
- temperature T_{st} = 20 °C (293.15 K);
- pressure p_{st} = 760 mm Hg (0.101325 MPa).

The gas compressibility coefficient shall be determined by calculation in accordance with GOST 30319.2-96.

To calculate the natural gas compressibility coefficient K_{compr} methods NX19 mod., GERG91 mod. and AGA8 can be used.

The system software and hardware make it possible to use other methods mentioned in the regulatory documents.

1.5.3 The Vympel-500 ultrasonic measurement system with an additional channel has a channel in addition to measurement channels that operates using reflections of the acoustic signal from the inner wall of the pipeline (Figure 5). The additional channel is used to monitor contamination of the pipeline's internal surfaces.

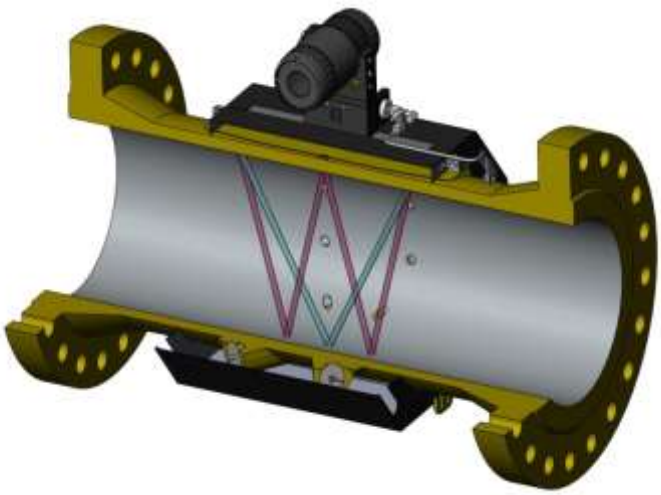

Figure 5 – Passage of additional channel ultrasonic signal

During radiation, the acoustic signal travels along several paths, including the V-path with a single reflection and the W-path with a triple reflection (Figure 5).

The ultrasonic signal propagation time from DPE1 to DPE2 and from DPE2 to DPE1, respectively, are: ***for the V-path***:

$$\tau_{12} = \frac{l_v}{C + \upsilon \cdot \cos\varphi}; \tag{13}$$

$$\tau_{21} = \frac{l_v}{C - \upsilon \cdot \cos\varphi}; \tag{14}$$

$$\text{Then } \frac{1}{\tau_{12}} - \frac{1}{\tau_{21}} = \frac{2\upsilon \cdot \cos\varphi}{l_v}, \tag{15}$$

$$\text{since } \cos\varphi = \frac{L}{l_v}, \tag{16}$$

$$\text{then } \frac{1}{\tau_{12}} - \frac{1}{\tau_{21}} = \frac{2\upsilon \cdot L}{l_v^2}. \tag{17}$$

$$\text{Hence, } \upsilon = l_v^2 \cdot \Delta\tau / 2L \cdot \tau_{12} \cdot \tau_{21}, \tag{18}$$

$$\text{where } \Delta\tau = \tau_{21} - \tau_{12}, \tag{19}$$

$$l_v^2 = L^2 + 4d^2. \tag{20}$$

for the W-path :

$$\tau_{12} = \frac{l_w}{C + \upsilon \cdot \cos\varphi}; \tag{21}$$

$$\tau_{21} = \frac{l_w}{C - \upsilon \cdot \cos\varphi}; \tag{22}$$

$$\text{Then } \frac{1}{\tau_{12}} - \frac{1}{\tau_{21}} = \frac{2\upsilon \cdot \cos\varphi}{l_w}, \tag{23}$$

$$\text{since } \cos\varphi = \frac{L}{l_w}, \tag{24}$$

$$\text{then } \frac{1}{\tau_{12}} - \frac{1}{\tau_{21}} = \frac{2\upsilon \cdot L}{l_w^2}. \tag{25}$$

$$\text{Hence, } \upsilon = l_w^2 \cdot \Delta\tau / 2L \cdot \tau_{12} \cdot \tau_{21}. \tag{26}$$

$$\text{where } \Delta\tau = \tau_{21} - \tau_{12}, \tag{27}$$

$$l_w^2 = L^2 + 16d^2. \tag{28}$$

Here DPE1 and DPE2 are piezoelectric transducers (piezoelectric sensors).
D is the measurement pipe (section) diameter, m.
l is the acoustic path length (*l_V is the V-path length, l_w is the W-path length)*, m;
L is the distance between ultrasonic sensor active centres, m;
φ is the angle of elevation of the acoustic path with respect to the line parallel to the pipeline axis, °;
υ is the average flow velocity along the acoustic path, m/s;
α is the piezoelectric sensor direction pattern span angle, °;
C is sound velocity in a motionless medium, m/s;
τ_{12} is signal detection time, along the flow, s;
τ_{21} is signal detection time, against the flow, s;
Δτ is the time difference of acoustic signal propagation time, along and against the flow, s.

The speed (υ) measured by the system is the average gas flow speed along the acoustic signal path.

To calculate the average speed of flow through the measurement pipe cross section, the speed distribution correction coefficient will be required.

Here, the average gas flow speed through the measurement pipe cross section (υ_a) can be determined using the following formula:

$$\upsilon_a = K_г \cdot \upsilon \tag{29}$$

$K_г$, where $K_г$ is the correction coefficient for speed distribution (in accordance with STO GAZPROM5.2-2005 Appendix B), is the function of Reynolds number (Re), pipe wall roughness, and acoustic beam location and type. When a signal is processed – when the beam passes through the measurement pipe axis (Figure 2) – for fully developed uniform turbulent flows, the values of $K_г$ are approximated using the following formula:

$$K_г = 1 \big/ (1{,}12 - 0{,}011 \times \log_{10}(\mathrm{Re})) \tag{30}$$

For laminar mode under gas uniform flow $K_г = 0.75$.

The pipeline contamination monitoring procedure is based on comparing the average speed of flow using the 'sensor to sensor' method (Figure 4) to the measured data in the additional channel 'with reflection' (Figure 5).

Measurement of the pipeline's internal dimensions leads to a deviation in the average speed measured using the 'with reflection' method, from the main value due to a reduction in the reflected acoustic path length.

1.5.4 Primary flow transducer configuration and operation

A flange measurement pipe (Version 1) and flange-less measurement pipe (Version 2) are used as primary flow transducers.

Piezoelectric sensors are installed at allocated locations in the measurement pipes together with the VMPL4.078.007 installation kit

The measurement section is connected to the pipeline by flange connection DN 80–1000 GOST or ANSI, w/o flange connection, or by welding (only measurement sections DN 800–1400 with bevel edge for butt welding). The system to pipeline connection size is shown in the respective technical documents (subject to design style).

The main parameters and dimensions of flanged measurement pipelines and straight sections of Vympel-500 ultrasonic measurement system are given in Table 13.

Table 13

Name	Designation	Operating pressure, MPa	Flange diameter, mm	Flanged measurement pipe (FMP) length, mm	Flanged measurement pipe inner diameter, mm	Flange material/ Pipe material	Designation of straight section	Straight section length, mm
FMB80/100	VMPL6.119.111	10	230	450	73	Steel grade 09Г2С GOST 19282-73 or other carbon steel*		400
								800
								1,600
FMB100/20	VMPL6.119.092	2.0	215	450	92	Steel grade 09Г2С GOST 19282-73 or other carbon steel*		500
								1,000
								2,000
FMB100/100	VMPL6.119.107	10	265	450	92	Steel grade 09Г2С GOST 19282-73 or other carbon steel*		500
								1000
								2,000
FMB150/16	VMPL6.119.055	1.6	279	450	154	Steel grade 09Г2С GOST 19282-73 or other carbon steel*	VMPL6.457.087	450
							VMPL6.457.087-01	750
							VMPL6.457.082	750
							VMPL6.457.072	1,500
							VMPL6.457.092	1,500
							VMPL6.457.077	3,000
FMB150/20	VMPL6.119.094	2.0	279	450	154	Steel grade 09Г2С GOST 19282-73 or other carbon steel*	VMPL6.457.087	450
							VMPL6.457.087-01	750
							VMPL6.457.082	750
							VMPL6.457.072	1,500
							VMPL6.457.092	1,500
							VMPL6.457.077	3,000

Table 13 (continued)

Name	Designation	Operating pressure, MPa	Flange diameter, mm	Flanged measurement pipe (FMP) length, mm	Flanged measurement pipe inner diameter, mm	Flange material/ Pipe material	Designation of straight section	Straight section length, mm
FMB150/100	VMPL6.119.024	10	356	450	154	Steel grade 09Г2С GOST 19282-73 or other carbon steel*	VMPL6.457.062	450
							VMPL6.457.062-01	750
							VMPL6.457.047	750
							VMPL6.457.043	1,500
							VMPL6.457.067	1,500
							VMPL6.457.053	3,000
FMB200/16	VMPL6.119.056	1.6	343	600	198	Steel grade 09Г2С GOST 19282-73 or other carbon steel*	VMPL6.457.088	600
							VMPL6.457.088-01	1,000
							VMPL6.457.083	1,000
							VMPL6.457.073	2,000
							VMPL6.457.093	2,000
							VMPL6.457.078	4,000
FMB 200/20	VMPL6.119.096	2.0	343	600	198	Steel grade 09Г2С GOST 19282-73 or other carbon steel*	VMPL6.457.088	600
							VMPL6.457.088-01	1,000
							VMPL6.457.083	1,000
							VMPL6.457.073	2,000
							VMPL6.457.093	2,000
							VMPL6.457.078	4,000
FMB200/100	VMPL6.119.022	10	419	600	198	Steel grade 09Г2С GOST 19282-73 or other carbon steel*	VMPL6.457.063	600
							VMPL6.457.063-01	1,000
							VMPL6.457.050	1,000
							VMPL6.457.049	2,000
							VMPL6.457.068	2,000
							VMPL6.457.054	4,000

Table 13 (continued)

Name	Designation	Operating pressure, MPa	Flange diameter, mm	Flanged measurement pipe (FMP) length, mm	Flanged measurement pipe inner diameter, mm	Flange material/ Pipe material	Designation of straight section	Straight section length, mm
FMB300/16	VMPL6.119.057	1.6	483	900	298	Steel grade 09Г2С GOST 19282-73 or other carbon steel*	VMPL6.457.089	900
							VMPL6.457.089-01	1,500
							VMPL6.457.084	1,500
							VMPL6.457.074	3,000
							VMPL6.457.094	3,000
							VMPL6.457.079	6,000
FMB300/20	VMPL6.119.098	2.0	483	900	298	Steel grade 09Г2С GOST 19282-73 or other carbon steel*	VMPL6.457.089	900
							VMPL6.457.089-01	1,500
							VMPL6.457.084	1,500
							VMPL6.457.074	3,000
							VMPL6.457.094	3,000
							VMPL6.457.079	6,000
FMB300/100	VMPL6.119.021	10	559	900	298	Steel grade 09Г2С GOST 19282-73 or other carbon steel*	VMPL6.457.064	900
							VMPL6.457.064-01	1,500
							VMPL6.457.048	1,500
							VMPL6.457.046	3,000
							VMPL6.457.069	3,000
							VMPL6.457.055	6,000
FMB400/16	VMPL6.119.058	1.6	597	1,200	373	Steel grade 09Г2С GOST 19282-73 or other carbon steel*	VMPL6.457.090	1,200
							VMPL6.457.090-01	2,000
							VMPL6.457.085	2,000
							VMPL6.457.075	4,000
							VMPL6.457.095	4,000
							VMPL6.457.080	8,000

Table 13 (continued)

Name	Designation	Operating pressure, MPa	Flange diameter, mm	Flanged measurement pipe (FMP) length, mm	Flanged measurement pipe inner diameter, mm	Flange material/ Pipe material	Designation of straight section	Straight section length, mm
1	2	3	4	5	6	7	8	9
FMB400/20	VMPL6.119.100	2.0	597	1,200	373	Steel grade 09Г2С GOST 19282-73 or other carbon steel*	VMPL6.457.090	1,200
							VMPL6.457.090-01	2,000
							VMPL6.457.085	2,000
							VMPL6.457.075	4,000
							VMPL6.457.095	4,000
							VMPL6.457.080	8,000
FMB400/100	VMPL6.119.023	10	686	1,200	373	Steel grade 09Г2С GOST 19282-73 or other carbon steel*	VMPL6.457.065	1,200
							VMPL6.457.065-01	2,000
							VMPL6.457.045	2,000
							VMPL6.457.044	4,000
							VMPL6.457.070	4,000
							VMPL6.457.056	8,000
FMB500/16	VMPL6.119.059	1.6	699	1,500	500	Steel grade 09Г2С GOST 19282-73 or other carbon steel*	VMPL6.457.091	1,500
							VMPL6.457.091-01	2,500
							VMPL6.457.086	2,500
							VMPL6.457.076	5,000
							VMPL6.457.096	5,000
							VMPL6.457.081	10,000
FMB500/20	VMPL6.119.104	2.0	699	1,500	470	Steel grade 09Г2С GOST 19282-73 or other carbon steel*	VMPL6.457.091	1,500
							VMPL6.457.091-01	2,500
							VMPL6.457.086	2,500
							VMPL6.457.076	5,000
							VMPL6.457.096	5,000

							VMPL6.457.081	10,000

Table 13 (continued)

1	2	3	4	5	6	7	8	9
FMB500/100	VMPL6.119.010	10	813	1,500	450	Steel grade 09Г2С GOST 19282-73 or other carbon steel*	VMPL6.457.066	1,500
							VMPL6.457.066-01	2,500
							VMPL6.457.052	2,500
							VMPL6.457.051	5,000
							VMPL6.457.071	5,000
							VMPL6.457.057	10,000
FMB600/16	VMPL6.119.060	1.6	840	1,500	600	Steel grade 09Г2С GOST 19282-73 or other carbon steel*		3,000
								6,000
								12,000
FMB600/20	VMPL6.119.105	2.0	840	1,500	600	Steel grade 09Г2С GOST 19282-73 or other carbon steel*		3,000
								6,000
								12,000
FMB700/16	VMPL6.119.061	1.6	960	1,500	692	Steel grade 09Г2С GOST 19282-73 or other carbon steel*		3,500
								7,000
								14,000
FMB700/20	VMPL6.119.106	2.0	960	1,500	692	Steel grade 09Г2С GOST 19282-73 or other carbon steel*		3,500
								7,000
								14,000
FMB700/75	VMPL6.119.067	7.5	1,050	1,500	690	Steel grade 09Г2С GOST 19282-73 or other carbon steel*		3,500
								7,000
								14,000
*Carbon or stainless steel flanged measurement pipes and flanged straight sections GOST R 54432-2011, ANSI/ASME B16.5 or ANSI/ASME B16.47 can be ordered.								

Sensor to electronic module connections are provided with sealed cable entries and connectors.

Piezoelectric sensor signals are amplified and processed by the electronic module receiver and then fed to the controller. The controller calculates gas flow speed and volume flow under operating conditions. It also measures gas temperature and pressure and reduces both flow and volume to standard conditions. In addition it records and stores measurement data.

The measurement data are displayed on the electronic module indicator and fed to the other systems via frequency and digital channels.

1.6 Measurement instruments, tools and accessories

1.6.1 Measurement instruments used for system calibration in accordance with the calibration method described in VMPL1.456.005 MP.

1.6.2 Tools and accessories for system installation and servicing are presented in Table 14.

Table 14

Tool	Standard size	Note
Wrench	Square 17	For installation of piezoelectric sensors
Double-ended open-jawed wrench 24x27	Wrench 7811-0026 H C1 X9 GOST 2839-80	For temperature sensor installation
Double-ended open-jawed wrench 30x32	Wrench 7811-0042 H C1 X9 GOST 2839-80	For installation of absolute pressure sensors
Double-ended open-jawed wrench 17x19	Wrench 7811-0023 H C1 X9 GOST 2839-80	For installation of overpressure detectors
Double-ended open-jawed wrench 22x24	Wrench 7811-0025 H C1 X9 GOST 2839-80	For installation of cable entries
Double-ended open-jawed wrench 10x12	Wrench 7811-0004 H C1 X9 GOST 2839-80	For electronic module installation
Double-ended open-jawed wrench 7x8	Wrench 7811-0006 H C1 X9 GOST 2839-80	For grounding bolt in the electronic module
Screwdriver 1.2×8	Mechanical screw driver type 3 1.2×8	For installation of connectors
Cross-head screwdriver	PH3	For pressure detector clamp installation
Hex wrench	5 mm	For pressure detector clamp installation

1.7 Marking and sealing

1.7.1 The explosion proof part of the system, electronics module VMPL3.857.001, has a nameplate with the following information:

- measurement device type approval symbol;
- manufacturer trade mark and name **NPO Vympel LLC**;
- equipment name;
- Ex-proof certificate number and certification body;
- explosion protection marking **"1Exd[ia]IICT6X"**;
- special explosion safety symbol **"E"»**;
- unified product conformity mark **"EAC"**;
- ambient temperature range **"–40 ≤ t_a ≤ 60 °C"**;
- ingress protection class **IP67**;
- power supply and power consumption;
- serial number and date of manufacture.

A dimensional drawing of the electronic module, VMPL3.857.001, is presented in Appendix B.

1.7.2 The explosion-proof part of the system — absolute pressure detector DA-018, absolute pressure DAD-004 and over pressure DI-017 — has a nameplate with the following information:

- manufacturer trade mark and name;
- serial number;
- certification authorities and certificate number;
- explosion protection marking "1ExiaIICT6X".

The explosion protection mark "X" indicates that these detectors can only be used with electronics module VMPL3.857.001.

The nameplates may have additional information explaining legends and parameter measurement units and providing basic information about the equipment.

The example below provides an explanation of the factory serial number:

No. □□□□□□□□: symbols 1 and 2 are the two last digits of year, symbols 3 and 4 are the month of manufacture, symbols 5–8 are the number in the manufacturer's numbering system.

1.7.3 The grounding symbol (GOST 21130-75) is next to the grounding bolt on the electronics unit body, VMPL3.857.001.

1.7.4 All units as well as spare and replaceable parts from the delivery package are marked in accordance with the corresponding detailed engineering drawings.

1.7.5 The transportation container is marked as per GOST 14192-96; this includes handling information: "Fragile. Handle with care", "Keep dry", "Top".

1.7.6 The system equipment shall be sealed by a representative of the Metrological Service following an initial inspection of devices; the mastic seal shall be put into the groove of the cover lock, VMPL8.046.004, above the cap screw head. The cover lock as it appears before sealing is shown in Figure 6.

1.8 Package

1.8.1 The system package shall conform to the manufacturer's detailed engineering drawing. The packing room shall comply with the following requirements: ambient air from +15 °C to +40 °C, air relative humidity up to 80 %, and the air inside the room shall be free of any aggressive admixtures.

1.8.2 The package shall ensure the integrity of the equipment during handling, transportation and storage and protect the equipment from climatic and mechanical loads.

1.8.3 Operating and shipping documents are wrapped in waterproof material; the document packet is placed under the transportation container cover, on the top layer of the packing material.

2 Description and operation of integral system parts

2.1 General

The measurement system basic delivery set includes the following integral components: electronics module VMPL3.857.001, over pressure detector DI-017 KRAU5.183.017, absolute pressure detector DAD-004 VMPL5.183.004 or absolute pressure detector DA-018 KRAU5.183.018, piezoelectric sensors, resistance thermometer and flanged measurement pipe (section).

2.1.1 Electronics module VMPL3.857.001 design

The dimensions of the electronics module, VMPL3.857.001, are presented in Appendix B. This module has an aluminium body with sealed connectors and cable entries for connecting the pressure, temperature and piezoelectric sensors. A window is provided in the body cover for an indicator unit. Protection class (GOST 14254-96; IEC 529-89) is not less than IP67. The unit's function-related electronic boards are housed inside the body. The body is also equipped with an external grounding bolt, threaded holes and cover locks, the grooves of which also serve as a site for the application sealing mastic.

2.1.2 Piezoelectric sensor design

The sensor comprises a stainless steel or titanium body that houses a sealed entry for the radiator power cable. Standard rubber rings, which are located in the mounting/joining pipe that is built into the measured medium pipeline, are used for sealing the sensor body. There is a cable entry on the sockolet external edge (threaded connection) that seals the internal space. The power cable is attached with a coaxial bolted connector.

2.1.3 The dimensions of the resistance thermal transducer, pressure detector DA-018, DAD-004 or DI-017, and interface module VMPL3.622.003 are presented in Appendix B.

2.2 System and electronics module VMPL3.857.001 explosion protection

2.2.1 The system's explosion protection is provided by the specific engineering solutions of the electronics module, VMPL3.857.001, and other integral components (pressure detectors DA-018, DAD-004 and DI-017, piezoelectric sensors). Other integral components are connected with intrinsically safe circuits GOST 30852.10-2002. These circuit are built around voltage and current limiters in addition to galvanic circuit isolation. The module body and cover are made of an aluminium alloy with no more than 6% magnesium content, in order to ensure intrinsic safety with regard to friction. The module body conforms to ingress protection class IP67, thanks to its rubber sealing rings.

2.2.2 Explosion protection markings for the module's integral components (GOST 30852.10-2002) are done in accordance with Table 15.

Table 15

Explosion proof devices and simple electric equipment	Explosion marking
VMPL3.857.001 electronics module	1Exd[ia]IICT6X
Overpressure detector DI-017 KRAU5.183.017 KRAU5.183.017-01 KRAU5.183.017-02 KRAU5.183.017-03	1ExiaIICT5X

Absolute pressure detector DA-018 KRAU5.183.018 KRAU5.183.018-01 KRAU5.183.018-02 KRAU5.183.018-03	1ExiaIICT5X
Absolute pressure detector DAD-004 VMPL5.183.004 VMPL5.183.004-01 VMPL5.183.004-02 VMPL5.183.004-03 VMPL5.183.004-04 VMPL5.183.004-05	1ExiaIICT5X
Piezoelectric sensors	
Platinum commercial resistance thermometer 100P or Pt100 Manufacturer: TERMIKO CJSC, type TPT; or PG Metran CJSC, type TSP; or NPP Elemer, type TS; or NPP Etalon OJSC type TSP; or Teplopribor-sensor LLC, type TSP	Without explosion protection marking. Simple equipment GOST 30852.10

Explosion protection type "level 'ia' intrinsically safe electric circuit" is provided through the use of the following design elements:

- non-sparking current-carrying elements that are installed in a special explosion-proof enclosure; the type is "explosion proof enclosure, Level 'd', with high-level protection against mechanical damage as per GOST 30852.1-2002;
- leakage paths and electric gaps that comply with GOST 30852.10-2002;
- board filling with compound complies with GOST 30852.10-2002, protection class GOST 14254-96 (IEC 529-89), dust and moisture protection – IP67;
- limitation of the module's external enclosure temperature, which does not exceed 85 °C, subject to GOST 30852.0-2002 for T6 temperature class electric equipment, duly taking into account the maximum ambient temperature through limitation of current through the circuit elements (GOST 30852.10-2002);
- solid (fixed) boards and nameplate with explosion protection marking 1Exd[ia]IICT6X on the VMPL3.857.001 electronics module **;**
- nameplate with explosion protection marking 1ExiaIICT5X on the pressure detector.

3 Intended use

3.1 General

3.1.1 Inspect the system transportation container upon delivery. Any and all damages must be reported.

3.1.2 In winter, the transportation container shall be opened in a heated room not sooner than 12 hours after being brought into this space.

3.1.3 Check the delivery set in accordance with Form VMPL1.456.005 FO.

3.1.4 Upon receipt, it is recommended to keep a record of the system damages and failures in accordance with the Form presented in Appendix A. This should contain equipment name and serial number, vendor name as well as equipment operation records, for example, installation date; name of installation contractor; installation location; maintenance history, description of failures, their causes and repair measures, etc.

3.1.5 Unpack and visually inspect the equipment. Check that the explosion protection markings are in accordance with para 1.7, check protection devices and fixing elements, and the integrity of the system integral equipment enclosures. Special attention should be given to the flanged measurement section internal surfaces, as well as all visible components of sensors and flange sealing surfaces. Any detected damages must be promptly documented and reported to the manufacturer.

3.1.6 The assembly procedure shall be determined during the design phase, prior to system installation. The flange nominal diameter, materials and type shall comply with the measurement section design. Fixing bolts, nuts and flange sealing shall be consistent with operating conditions and all legal requirements and standards.

IMPORTANT! Any deviations from Vympel-500 system design and installation conditions must be agreed to by the vendor and properly documented prior to use.

3.1.7 Installation (removal) operations shall be performed by persons who:

- are certified for on-site handling/operation of explosion proof equipment;

- are familiar with the system's technical documentation as well as other auxiliary equipment used during installation activities.

3.2 Operation limits

3.2.1 Piezoelectric sensors, the pressure detector, resistive temperature transducer and the electronics module can be installed in explosion hazard zones in buildings and external plants in accordance with the electrical installation code (section 7.3) and other applicable regulations.

3.2.2 The uninterrupted power supply unit and interface module are operated outside the explosion hazard area.

3.2.3 The equipment must be operated in accordance with these operating instructions.

3.2.4 The installion and operation of the equipment must comply with the requirements of the following documents:

- Electrical installation code (EIC), 2003;
- Regulations for the operation of consumer electrical installations 2003;
- Interindustry occupational safety rules (safety regulations) when operating electrical installations (POT PM-016-2001);

- GOST 12.2.003-91 SSBT. “Manufacturing equipment. General safety requirements”;
- GOST 12.2.007.0-75 SSBT. “Electrical devices. General safety requirements”;
- GOST 12.3.009-76 SSBT "Handling operations. General safety requirements";
- GOST 12.3.019-80 SSBT "Electrical test and measurements. General safety requirements";
- GOST 30852.13-2002 "Explosion proof electrical equipment. Section 14. Electrical installations in explosion hazard areas (except underground mines)";
- GOST 30852.16-2002 "Explosion proof electrical equipment. Section 17. Inspection and maintenance of electrical installations in explosion hazard areas (except underground mines)";
- GOST 8.611-2013 GSI. “Gas flow rate and quantity. Ultrasonic Flow Transducer Measurement Method (Technique)".

3.2.5 During installation, do not expose the system to friction or impacts that can result in spark formation.

3.2.6 Power cords must be disconnected from the power source before connection the system equipment.

3.2.7 The system's protection against electric-shock hazard conforms to Class I GOST 12.2.007.0-75.

3.2.8 The system may only be serviced and operated by properly trained individuals. During pre-commissioning, DO NOT connect/disconnect power cable when the equipment is switched on.

3.2.9 During operation, the system time can be adjusted by up to ±2 hours relative to the current time.

3.3 Preparation for operation

3.3.1 Pipeline preparation activities and installation of the Vymplel-500 ultrasonic measurement system and upstream/downstream straight sections are not part of the delivery package.

3.3.2 The standard-design measurement system comprises a flanged measurement section, input straight section, output straight section and adapters for connecting to attached pipelines (if required).

3.3.3 The arrow on the measurement enclosure indicates the basic gas flow direction.

If the meter only monitors one flow direction, we recommend that you install the measurement system in accordance with the direction of the arrow. In the meter's reverse mode, this arrow will still indicate the direct (positive) direction.

3.3.4 The following tools and accessories are necessary for installation of the system:

- lifting equipment or a forklift (the lifting capacity must be sufficient to safely manipulate the equipment or equipment assembled with a pipeline);
- lifting belts;
- wrenchs or corresponding power tools for installing flange connections and other fittings;
- flange seal gaskets;
- bolt grease;
- aerosol for leakage detection (or soap solution).

3.3.5 Pipeline flanges, bolts, nuts and sealing components used must be able to withstand both maximum operating pressure and temperature and external operating conditions (external and internal corrosion).

3.3.6 Flanged measurement sections and straight sections must be safely bundled for handling and lifted and using lifting belts.

3.3.7 Flange seal gaskets must be installed evenly across the entire connection perimeter in

such a manner as to prevent any curving (distortion) in order to avoid bottlenecking of the pipe's internal diameter due to improper gasket installation.

3.3.8 Install the attachment fitting (installation component kit) to minimize curving/distortion between the input straight section, flanged measurement section, output straight section, and input and output pipelines.

3.3.9 Tighten the nuts in a criss-cross manner. The torque moment shall correspond to the specifications for the design of the assembly unit being mounted.

3.3.10 Install piezoelectric, pressure and temperature sensors in accordance with paragraph 3.4.

3.3.11 Fill the pipeline with medium being measured and check the installed system and pipeline connections for leakage.

IMPORTANT! Once installation is complete, perform a leakage test in accordance with the relevant regulations and standards.

3.4 Installation and removal of the system's integral components

3.4.1 Before installing integral components, check explosion protection marking, equipment serviceability and gasket elements (explosion protection), and remove protection enclosure from equipment.

3.4.2 When installing system sensors, proceed in a manner that prevents that they sustain mechanical damage.

To prevent damage, DO NOT expose the sensor body to impacts.

The installation of piezoelectric sensors under pressure shall conform to Guidelines VMPL1.456.005 IM (supplied for specified individual orders to companies certified for installation and pre-commissioning of equipment in explosive environments. In addition such companies must also be certified in industrial safety and receive instruction from experts of NPO Vympel).

3.4.3 System components shall be installed in explosion hazardous zones in accordance with the requirements of GOST 30852.13-2002, the electrical installation code (section 7.3), regulations for the operation of consumer electronic installations (section 3.4), these operating instructions, and any other related regulatory documents.

3.4.4 Piezoelectric sensors (complete with sealing rings) shall be installed in the measurement section chamber and fixed using fixing elements from the VMPL4.078.007 installation kit; the sensor cable is to be attached to the connector.

3.4.5 Pressure and temperature detectors shall be installed in accordance with technical documentation. Pressure and temperature detector (temperature transducer) installation diagrams are presented in Appendix D.

3.4.6 After all integral components are installed, secure the equipment with the protective enclosure. Vympel-500 mounting dimensions and delivery options are presented in Appendix E.

3.5 Installation and connection of piezoelectric sensors, the electronics module, pressure detector, and resistive temperature transducer.

3.5.1 To connect the piezoelectric sensor cables (cable kit from the measurement section kit of accessories), rotate the rear cover VMPL8.046.004 of the VMPL3.857.001 electronics module counter-clockwise to remove it.

IMPORTANT! Rotate the lock to remove it from the cover groove (Figure 6).

Figure 6

Cable connectors for piezoelectric sensors XW1–XW16 (16 pcs) are under the cover. Connect cables to connectors observing the marking; pass the cables in the electronics module through the bottom section as shown in Figure 7. The piezoelectric sensor cables come out from the electronics module via cable entries MBA25-16 and run inside rack VMPL8.121.002 of the electronics module.

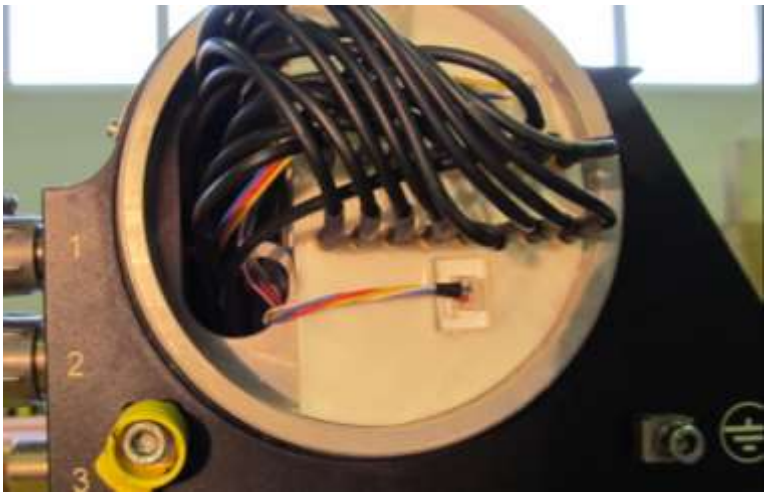

Figure 7

Tighten the rear cover VMPL8.046.004 in its seat and fix with lock. Rack VMPL8.121.002 is installed on top of the flanged measurement section. The piezoelectric sensors are passed inside the rack. The VMPL3.857.001 electronics unit is installed on the rack and fixed with four screws M6x12 A2 DIN912 (two screws on each side, Figure 8).

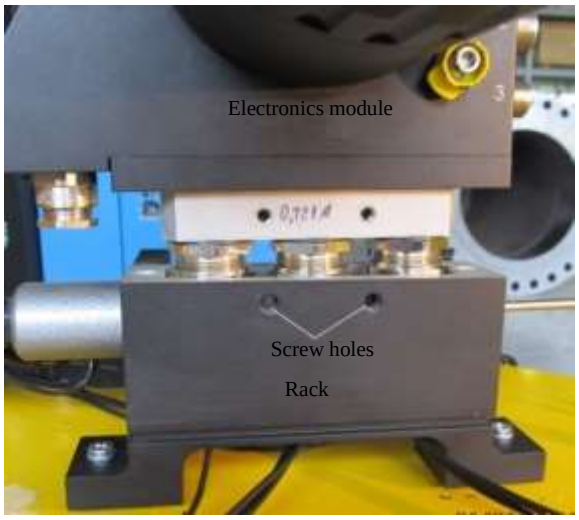

Figure 8

3.5.2 Power for the electronics module is supplied by an UPS via the interface module, VMPL3.622.003; both components can be supplied together with the measurement system depending on the specific order and in accordance with the configuration data sheet.

IMPORTANT! The uninterrupted power supply unit and interface module, VMPL3.622.003, must be installed in a non-explosive area.

The VMPL3.857.001 electronics module must be grounded.

Unused cable entries must be plugged.

3.5.3 Connection of the system to external equipment

To connect the power cable and RS-485 interface to the system, remove screws M6x12 A2 DIN912 (4 pcs) and remove the VMPL8.046.006 cover. Pass the cable through cable entry 20s-M20-A2F to the electronics module.

IMPORTANT! Turn off the power before connecting cables.

Terminal connector XS1 (marked 1, 2, 3, 4) are shown in Figure 9.

Connect the cable in accordance with Table 16.

Table 16

Contact No.	Connector designation	
1	Power supply	Plus 24V
2		Minus 24V
3	Interface RS-485	A
4		C

Figure 9

After connecting the cable (power supply + interface RS-485), install the VMPL8.046.006 cover in its proper location and reinstall the screws with rubber seal ring.

3.5.4 Installation of piezoelectric sensors

3.5.4.1 Install piezoelectric sensors in the proper mounting seats on the flanged measurement section. Install the piezoelectric sensors together with the DPE VMPL4.078.007 installation kits (Figure 10) which includes:

a) VMPL8.248.003 ring
(split cone, 4 pcs)

b) VMPL8.240.004 ring

c) VMPL8.935.001 nut

d) VMPL8.223.011 bushing

Figure 10

The installation kit and sensor are presented in Figure 11.

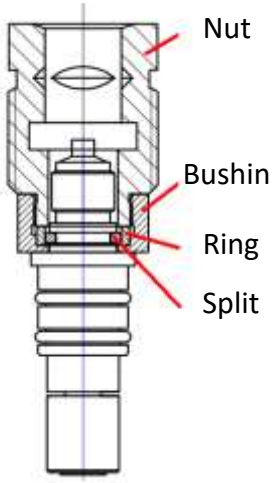

Figure 11

3.5.4.2 Piezoelectric sensor installation procedure:

- install seal rings 016-020-25-2-2 GOST 9833-73 (2 pcs, Figure 12) on the sensor;

Figure 12

- slip VMPL8.223.011 bushing over the sensor (Figure 13);

Figure 13

- place split cones inside the VMPL8.223.011 bushing and arrange them around the sensor circle at equal intervals (Figure 11);
- insert VMPL8.240.004 ring;
- screw VMPL8.935.001 nut into VMPL8.223.011 bushing.

IMPORTANT! Left-hand thread. Before screwing in, apply Loctite-243 (Henkel) medium-density thread grease onto the thread. The nut should be easy to tighten.

If it is impossible to easily tighten the nut, disassemble the assembly and check the placement of the split cones (do not apply a lot of force). A properly assembled system allows for minor looseness for the sensor in order to centre it in its mounting seat during the installation process.

The piezoelectric sensor installation kit together with the sensor and seal rings is shown in Figure 14.

Figure 14

3.5.4.3 Insert the assembled unit in the mounting seat on the flanged measurement section. Prior to insertion, apply petroleum jelly on the seal rings.

IMPORTANT! To prevent damage, DO NOT expose the sensor body to impacts.^

Tighten VMPL8.935.001 screw using a special wrench (square wrench 17).

Connect the piezoelectric sensor cable in accordance with the marking (Figure 15).

Figure 15

3.5.5 Pressure detector installation

Pressure detector VMPL4.078.031 installation kit includes the following components (Figure 16):
- V82A-D6M-A-S valve;
- DAF6M-4N adapter;
- DM C6M-2N nozzle;
- THT-3R60-6-1 L=300 h16 seamless pulse tube;
- VMPL8.665.004 and VMPL8.665.005 clamp.

IMPORTANT! When connecting installed components, use Loctite-557 thread sealant.

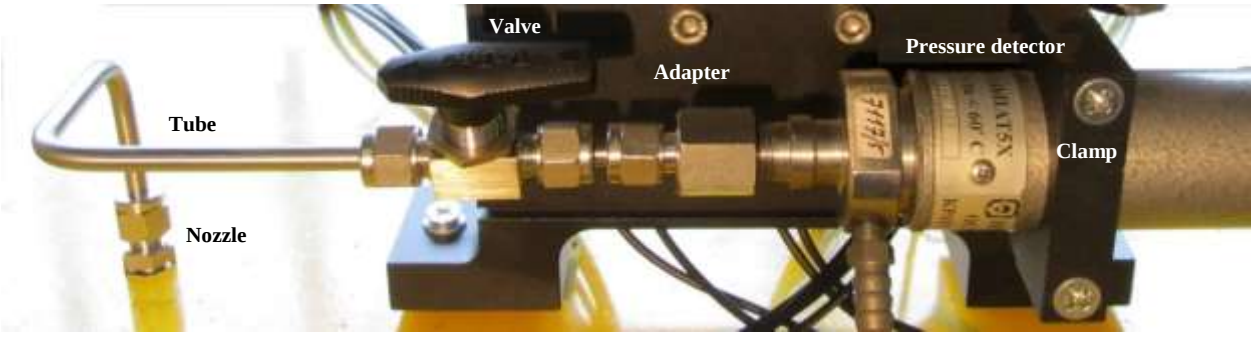

Figure 16

The pressure-detector fixing clamp consists of two parts:
- part one (VMPL8.665.004) is attached to the electronics module rack (Figure 17);
- part two (VMPL8.665.005) holds the pressure detector (Figures 18 and 19).

Clamps, part one

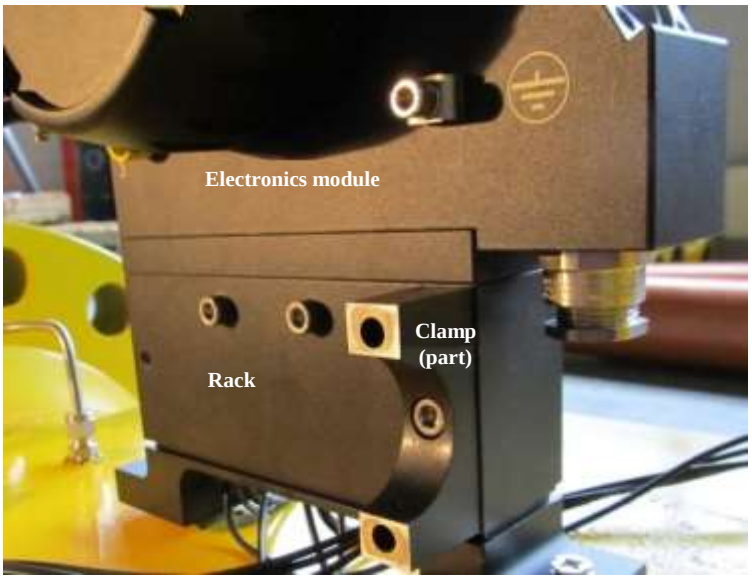

Figure 17

Clamps, part 2

Figure 18

Clamp assembled with pressure detector

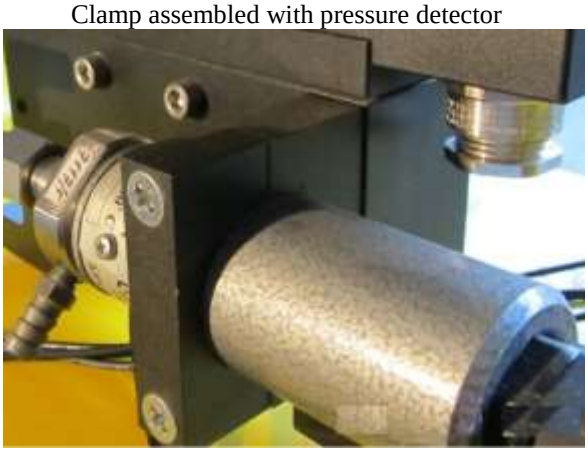

Figure 19

The pressure detector cable is connected to terminal "2" of the electronics module, VMPL3.857.001**.**

3.5.6 Installation of submerged or body-mounted resistive temperature transducer

The system can be equipped with either a submerged or body-mounted resistive temperature transducer.

The submerged resistive transducer (Figure 20) is to be installed on a weldolet (from the resistive temperature transducer kit) of the output straight section. Depending on the system's operating pressure, the temperature sensor can be operated with or without (up to 2.5 MPa) a protection sleeve (Figure 21). If the gas has high chemical activity (high hydrogen sulphide content, etc.), the protection sleeve is installed regardless of the operating pressure.

It is recommended to add mineral oil to the gap between the temperature transducer and protection sleeve.

Temperature sensor

Figure 20

Protection sleeve

Figure 21

Install the submerged resistive temperature transducer in accordance with Figure D.3.

Once the transducer is installed on the measurement pipeline, connect the resistive temperature transducer cable KRAU4.841.026 to terminal "1" of the electronics module, VMPL3.857.001.

The KRAU4.841.026 cable shall be sealed in the cable entry of the resistive temperature transducer as follows:

unplug the cable entry before connecting the cable; to do this, unscrew the lock nut and remove the plug, then insert the cable leads into the cable entry body (the body is complete with a rubber sleeve).

The cable external insulation is to extend from the gland entry by 5–10 mm into the resistive temperature transducer. Tighten the sealed entry using the lock nut (Figure 22).

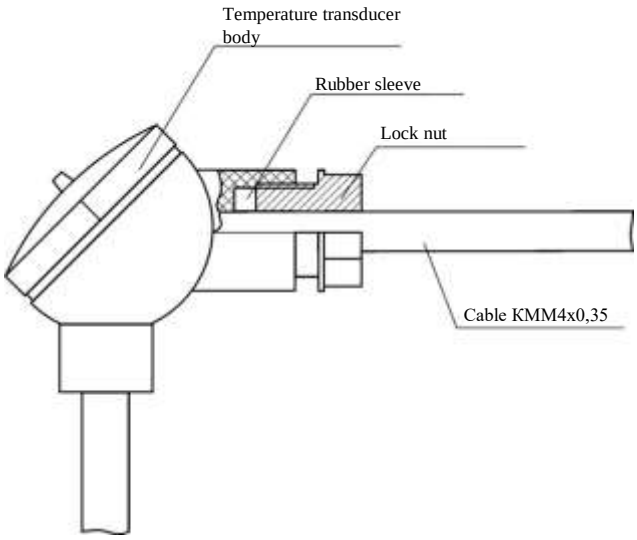

Figure 22

The resistive temperature transducer internal leads shall be connected to the KRAU4.841.026 cable (for transducers with 4 terminals) in accordance with the connection diagram in Figure 23.

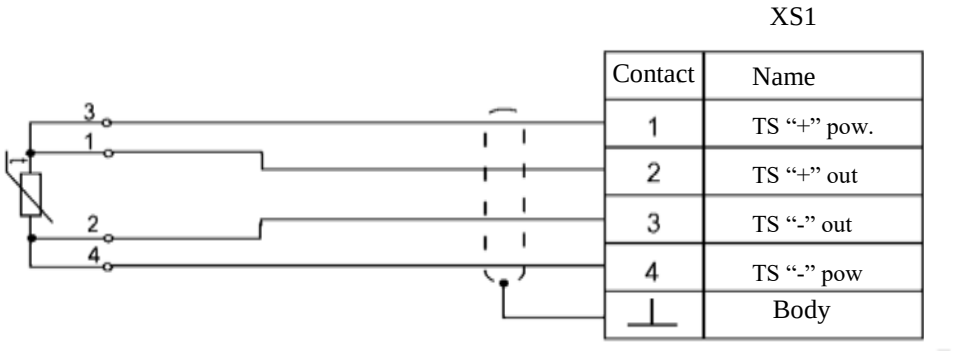

Figure 23

Resistive temperature transducer internal leads are to be connected to the KRAU4.841.026 cable (for the transducers with 2 terminals) in accordance with connection diagram in Figure 24.

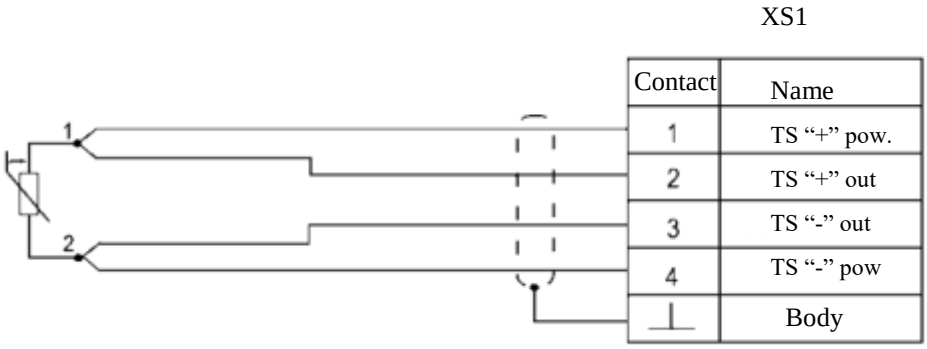

Figure 24

Installation of the body-mounted resistive temperature transducer (see Figure B.2) shall conform to VBAL2.821.011 RE or the operating documentation for a similar product.

Once the transducer is installed on the measurement pipeline, connect the resistive temperature transducer cable, KRAU4.841.026, to terminal "1" of the electronics module, VMPL3.857.001.

The internal leads of the resistive temperature transducer are to be connected to the cable, KRAU4.841.026, in accordance with the connection diagram in Figure 23; the appearance of the resistive temperature transducer mother board T

SP-011 is presented in Figure 25.

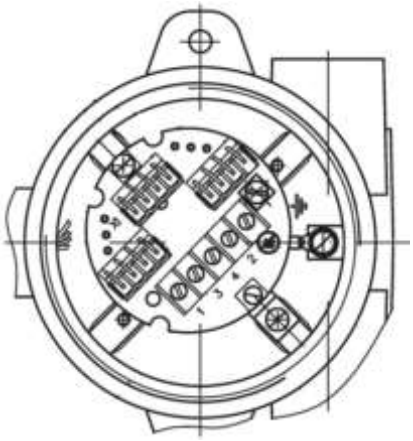

Figure 25 – General appearance of the mother board with the terminal board of body-mounted temperature transducer (w/o cover)

3.5.7 The system's electrical connections

3.5.7.1 Electrical wiring for installation of the Vympel-500 is not included with delivery.

3.5.7.2 Electrical connections shall be made in accordance with connection diagrams in Appendix F. Connector tables are presented in Appendix G.

When sealing cables in cable entries of the VMPL3.857.001 electronics module:

- before attaching the cable, unplug the gland entry. To do this, remove lock nut 1, remove the plug, pass cable leads in body 3 of the sealed entry (rubber seal, 2 must be installed);
- external cable insulation must exend into the module by 5–10 mm. Tighten the sealed entry using nut 1 and wrench (Figure 26).

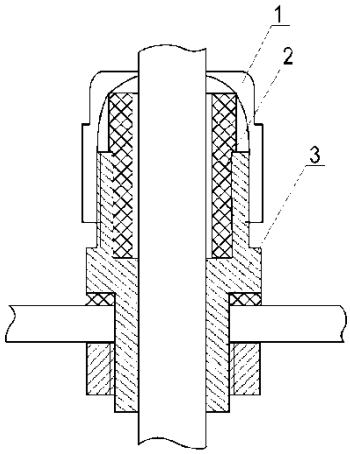

Figure 26 – Sealed cable entry of electronics module, VMPL3.857.001

Two options are available for connecting the Vympel-500 measurement system:

a) RS-485 (integration of equipment with a telemechanics system or use of a special computer for presetting parameters);

b) frequency output (used to check the equipment by authorized metrological contractors).

3.5.7.3 Unused cable entries must be plugged.

3.5.7.4 The electronics module must be grounded via the dedicated bolt (on the module body) marked with a grounding symbol as per GOST 21130-75. The equipment's integral components supplied with power from the grid must be grounded via a grounding cord or grounding terminals.

3.5.7.5 Once installation is complete, check grounding resistance. General grounding line resistance may not exceed 0.4 Ohm.

3.6 Operation

3.6.1 Study these Operating Instructions.

3.6.2 Install the equipment in accordance with the requirements of paragraphs 3.1–3.5.

Before turning the system on, check the installation for compliance with paragraphs 3.1–3.5.

3.6.3 To turn the system on:

- connect the equipment to the special computer provided for presetting the system parameters;
- supply power from an uninterrupted power supply;
- turn on the computer;
- launch the terminal program;
- check the time (preset) in the terminal program;
- check parameters for compliance with the configuration data sheet,VMPL1.456.005 FO, then adjust the pressure detector zero signal in accordance with paragraph 3.6.5.

3.6.4 Accurate parameters will be set 30 minutes after you supply power to the system.

DO NOT operate the equipment without setting the date and time!

DO NOT operate the equipment without connecting the sensors!

3.6.5 Correction of the pressure detector zero signal and zero setting for velocity measurement channel

3.6.5.1 Over-pressure zero setting

Setting the over pressure detector zero signal can be performed at initial start-up or as a part of schedule maintenance activities. Setting the zero signal is performed through the user's terminal program.

IMPORTANT! The over pressure channel zero signal must be corrected with zero over pressure. To correct the zero signal:

a) close the shut-off valve; unscrew the DAF6M-4N adapter to depressurize the connecting piece on the sensor’s atmospheric side;

b) wait for 3 minutes and then adjust the zero signal using the computer provided for setting operating parameters;

c) re-seal the adapter to the sensor connection.

You can check the proper value of the over pressure channel zero setting on the pressure detector. Depending on the required accuracy level, the zero signal value shall not exceed 0.005 % of the upper limit for over pressure measurements.

3.6.5.2 Correction of the absolute pressure channel values

You can check the absolute pressure channel zero signal value by exposing the absolute pressure detector to the atmosphere. To do this:

a) close the shut-off valve; unscrew the DAF6M-4N adapter to depressurize the connecting piece on the sensor’s atmospheric side;

b) wait for 3 minutes, and then take measurements under atmospheric (barometer) pressure.

The proper value of the absolute pressure channel zero signal can be determined by comparing the absolute pressure channel readings to barometer readings within the given period of time. The difference in the readings shall not exceed the preset accuracy level for this period of time.

The absolute pressure channel reading can be corrected at initial start-up or as a part of schedule maintenance activities.

c) re-seal the adapter to the sensor connection.

During operation, correction of the absolute pressure channel zero signal is not required **(only performed during inspection)**. Corrections are performed through the user's terminal program.

The pressure correction can be disabled by setting the barometer pressure to '0'.

IMPORTANT! When you adjust the absolute pressure channel values, make sure to preset barometer pressure in kgf/cm^2. The relationship between barometer pressure in kgf/cm^2, mm Hg and kPa can be determined using the following formula

$$P_{бар}(кгс/см^2) = 0{,}0013595 \times P_{бар}(мм.рт.ст.) = P_{бар}(кПа)/98{,}0665. \quad (31)$$

3.6.5.3 Zero setting of the velocity measurement channel

During operation, the velocity measurement channel zero setting is not required (only performed during inspection).

3.7 Uniterm software for diagnostics and configuration of the Vympel-500 ultrasonic measurement system

3.7.1 General

The Uniterm terminal program is a Windows-based graphics application for operational monitoring of data, configuration, registration of data and intervention history of the Vympel-500 ultrasonic measurement system.

The terminal program makes it possible to:

- connect up to 16 devices to a dedicated configuration computer (the number of connected devices can be increased upon Customer/Operator request);
- configure (set-up) the equipment by inputting initial measurement parameters into the non-volatile memory of the electronics module;
- read actual absolute pressure, measurement medium temperature;
- receive instantaneous values for the measured medium flow (under operating and reduced to standard conditions), available volume under standard conditions;
- read natural gas combustion heat and cumulative combustion heat data.
- adjust the equipment calculation parameters (measured medium parameters, flow meter parameters) under a specific user access level;
- create measurement and calculation data bases;
- extract hourly and daily records of the medium’s hour-average/daily-average absolute pressure, temperature, flow under operating and reduced to standard conditions, as well as combustion heat for a specified period;
- provide access to the history database (tracks) stored in the electronics module’s non-volatile memory;
- synchronize the equipment’s internal clock to the PC clock.

3.7.2 Connect equipment

The measurement system can be connected to a PC via RS-485 interface.

If a serial port is not available, a USB<->COM converter (Figure 27) will be required.

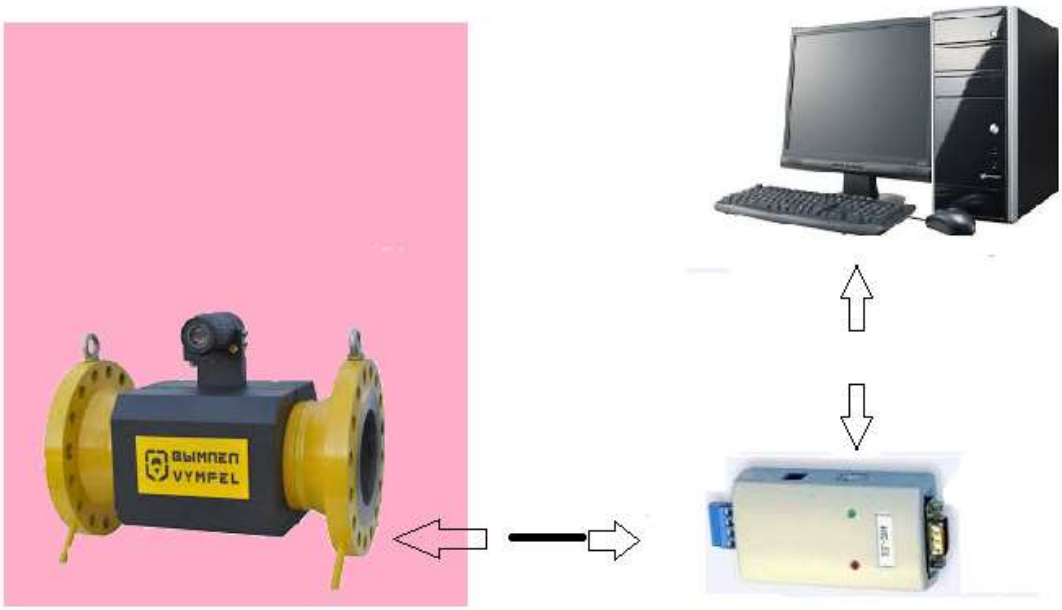

Figure 27 – PC to equipment connection

3.7.3 Installing and running the software

Uniterm software does not require a special installation procedure. Just copy and paste the folder with executable code to any folder on the disk. The program is compatible with any software versions (starting from V1.0.0) of the Vympel-500 series equipment.

Uniterm system requirements:

- Microsoft Windows XP or better;
- CPU min. 1.4 GHz;
- RAM 1 Gb min.;
- Over 2 Gb free disk space;
- USB or serial interface.

To start the program, click on "run_uniterm". A dialog box will appear for entering the username and password together with a button for running the program (in English and Russian).

User access level	Username	Password
Operator	xxxxxx	xxxxxx
Authorized operator	xxxxxx	xxxxxx
Tools	xxxxxx	xxxxxx

Figure 28

During the authorisation check, the program determines the user access level.

The following access levels are available (Figure 28):

- full access to functions and settings in the Tools section; provided for the Manufacturer's engineers;

- adjustable access levels for Operator representatives ("Operator") or "Authorized operator" representatives; specific sets of parameters that can be changed with a specific access level (to be agreed by the Manufacturer and Operator).

3.7.4 Program functions

After entering the correct username and password, and selecting the language, the main window is displayed (Figure 29).

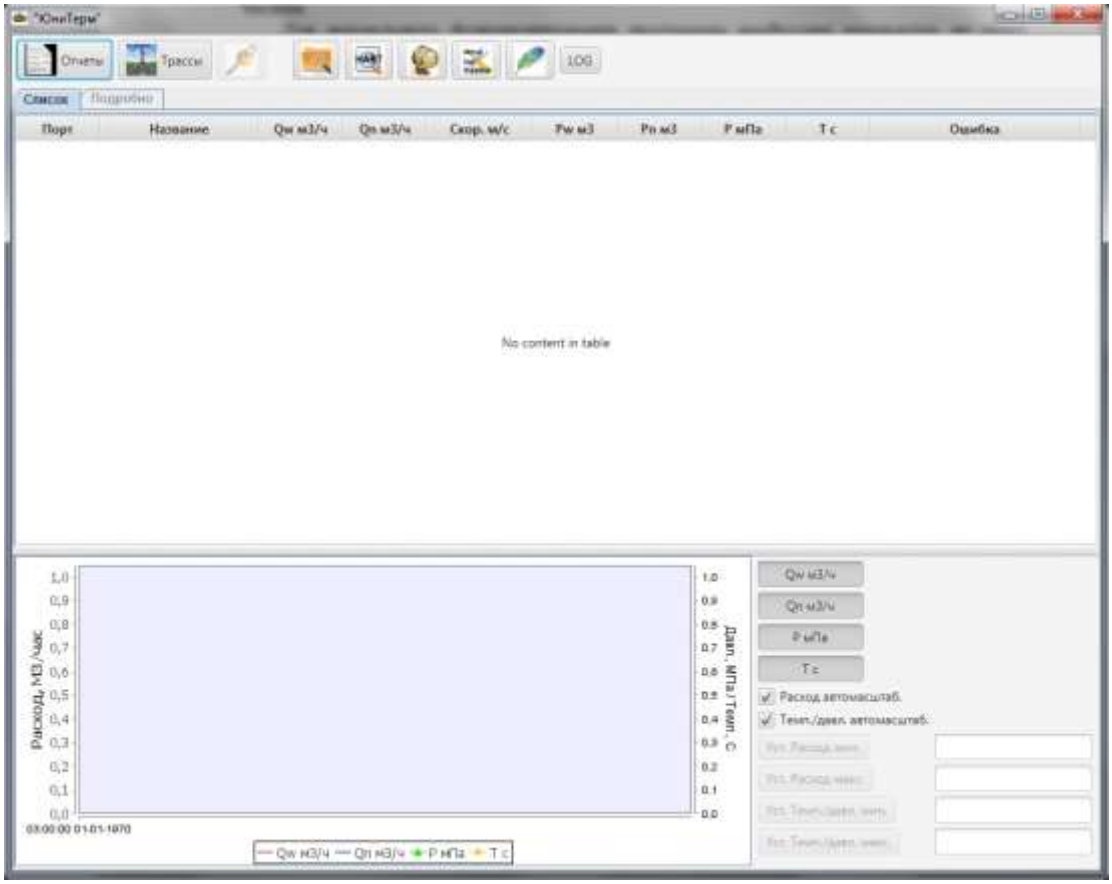

Figure 29

Buttons in the top part of the window and their function:

- "Reports" displays a dialog window with reports;

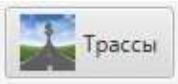

- "Tracks" displays a dialog window for track processing;


- "Change password" displays a dialog window to change the password;


- "Search for Modbus RTU" scans and connects devices connected via Modbus RTU protocol;

- "Search for HART" scans and connects devices connected via HART protocol;


- "Search for TCP Modbus RTU" scans ports and connects devices connected via TCP Modbus;


- "Tune TCP Modbus" displays a dialog window with TCP Modbus connection parameters;


- "On/Off background processing of tracks" turns on/off the background processing of tracks;

- "LOG" turns on/off recording of data to operation flow file.

3.7.5 Communicating with the system

To initiate communication, click on the “search for” button, corresponding to the data exchange protocol:  Modbus RTU, 

HART or  TCP Modbus.

After clicking on the corresponding button, if the equipment is successfully detected, the main window will display the equipment status bar (Figure 30) with COM number, equipment name, operating flow and normal flow, flow velocity, cumulative flow in operating and normal conditions, pressure and temperature. A column will also appear showing equipment failures during operation and the internal clock with a synchronization button that enables synchronization of the equipment’s internal clock with the PC clock.

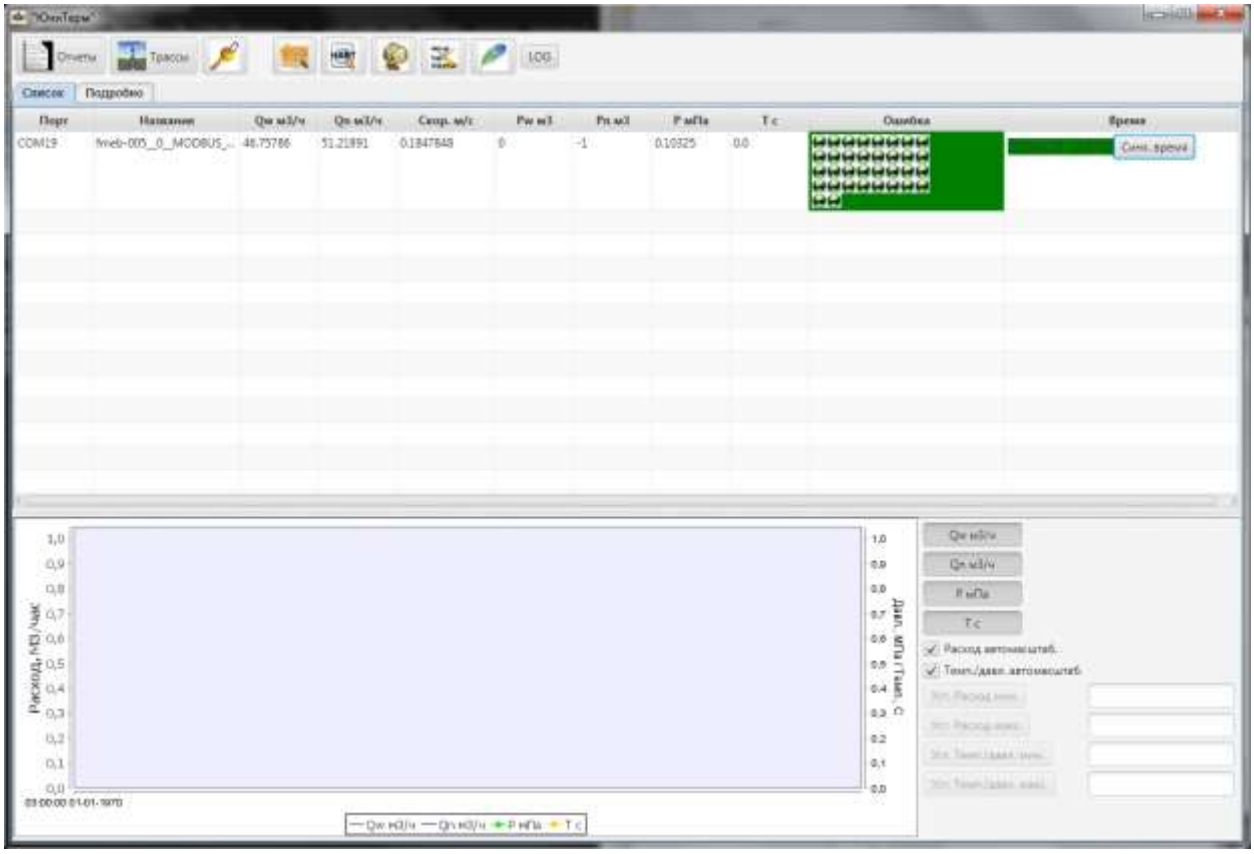

Figure 30

3.7.6 **Time synchronization**

To synchronize time, click on the Sync Time button, the time in the bar will be synchronized with the PC clock time.

In standard conditions, time synchronization is required if the time difference is less than two hours. Otherwise, a warning window will be displayed to inform you that time synchronization is not possible (Figure 31). If this is the case, the time can be synchronized by powering the equipment off and on again, clicking on the Sync Time button within two minutes after the restart.

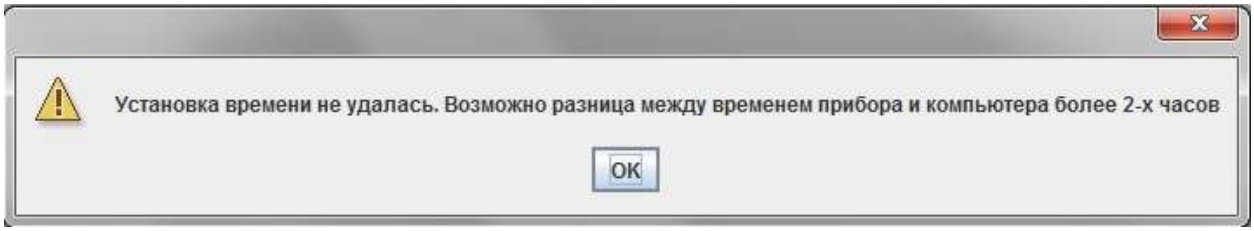

Figure 31

For a detailed explanation of time synchronization error, point the cursor to the column that displays the equipment's internal time. A pop-up message will appear (Figure 32) within one second.

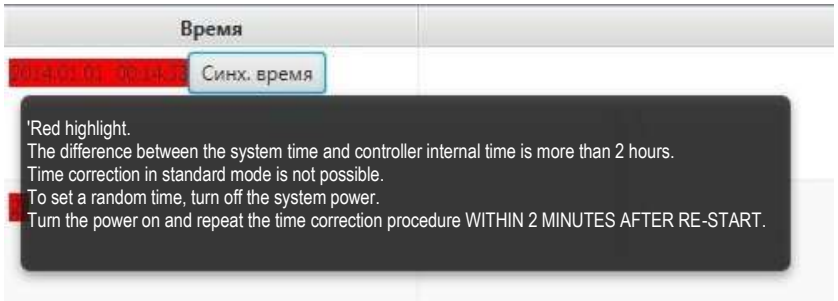

Figure 32

IMPORTANT! During the initial connection of the system to the PC, the time difference between these two may be more than 2 hrs. In this case, it is impossible to synchronize time in standard mode. Turn off the system, then turn the system back on and perform synchronization within 2 minutes after re-start.

3.7.7 Display of diagram data

To see the diagram, left click on the connected equipment status bar. The flow in operating and normal conditions, pressure and temperatures diagrams will be displayed in the lower area of the main window (Figure 33).

The diagram settings will be available to the right of the diagram. You can:

- enable/disable the display of operating/standard flow, pressure and temperature diagrams;
- enable/disable automated scaling of operating/standard flow, pressure and temperature diagrams;
- manually scale the diagrams and enter maximum or minimum values.

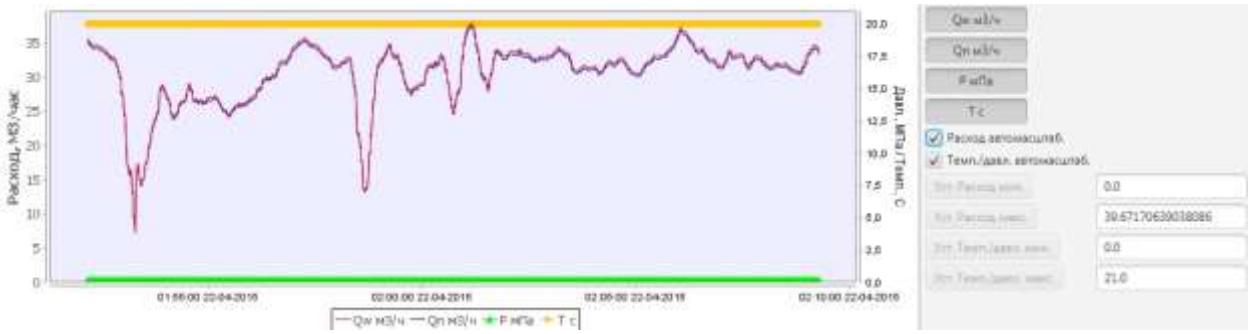

Figure 33

3.7.8 View and change parameters

To move to the system information and settings, left click the tab "Details" in the main window (Figure 34).

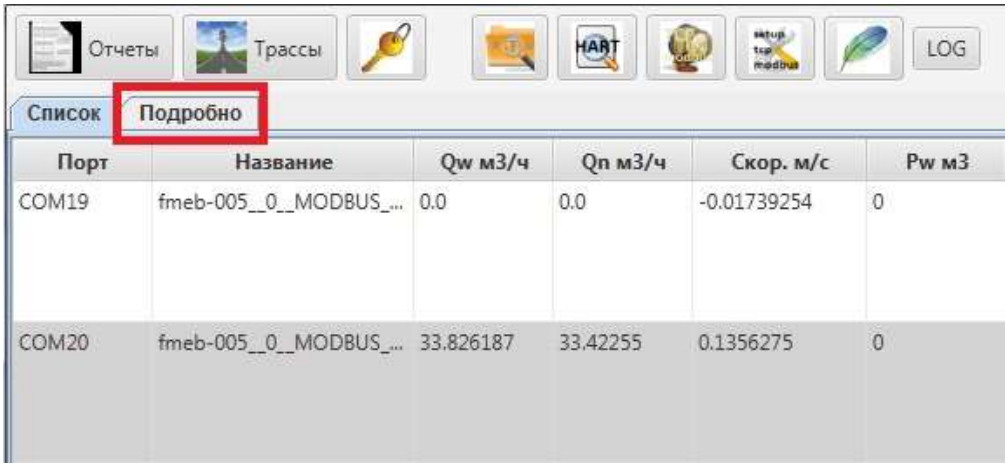

Figure 34

The main window will display: a field with a reference information tree and settings, a field with the selected (from the tree) parameters and an area to be used to input diagrams (Figure 35).

The following buttons are arranged below the field with the reference information tree:

- "Read tags from device" – used to read settings and information from the system.
- "Write all changes…" – enables recording of changed operating parameters.
- "Save to file" – enables saving the system's current setting and information to a configuration file.
- "Download from file" – enables downloading of settings and information from a configuration file.

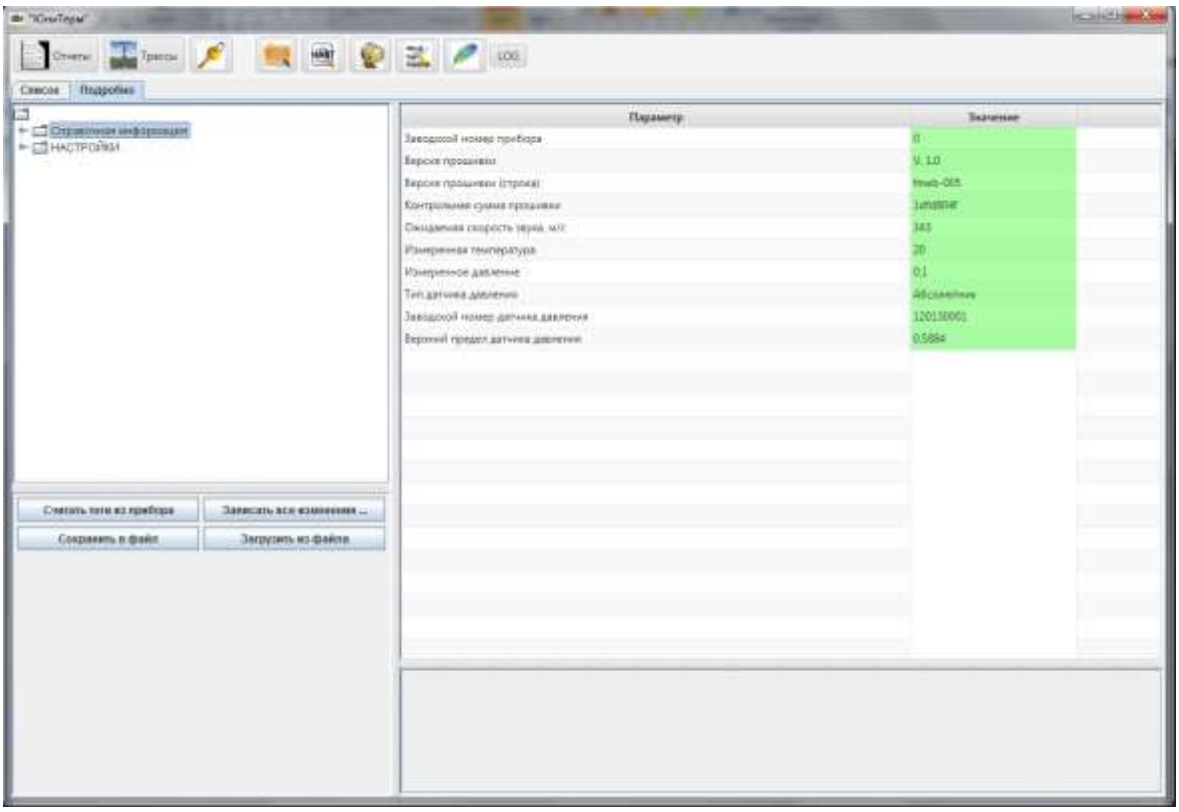

Figure 35

To view the system settings and information, left click on the corresponding folder in the

information tree field. Information and/or settings will appear in the field to the right. To hide the tree, double left click on the folder in the tree area:

"**Reference data**".

If you select this folder, the following information will be displayed in the field to the right:

- Device factory number;
- Software number and version;
- Software check sum;
- Expected sound velocity (calculated by the system);
- Measured temperature;
- Measured pressure;
- Pressure detector type and serial number;
- Pressure detector upper limit;

In addition to this, the "Reference data" section contains:

- Error codes;
- AFR sensors;
- Noise RMSD;
- Sensor characteristics;
- Instantaneous data on velocities;
- Flow reference data (average sound velocity, average flow velocity);
- Accumulated flow;
- Flow per hour;
- Flow per day;
- Temperature.

Program windows are shown in Figures 36–40.

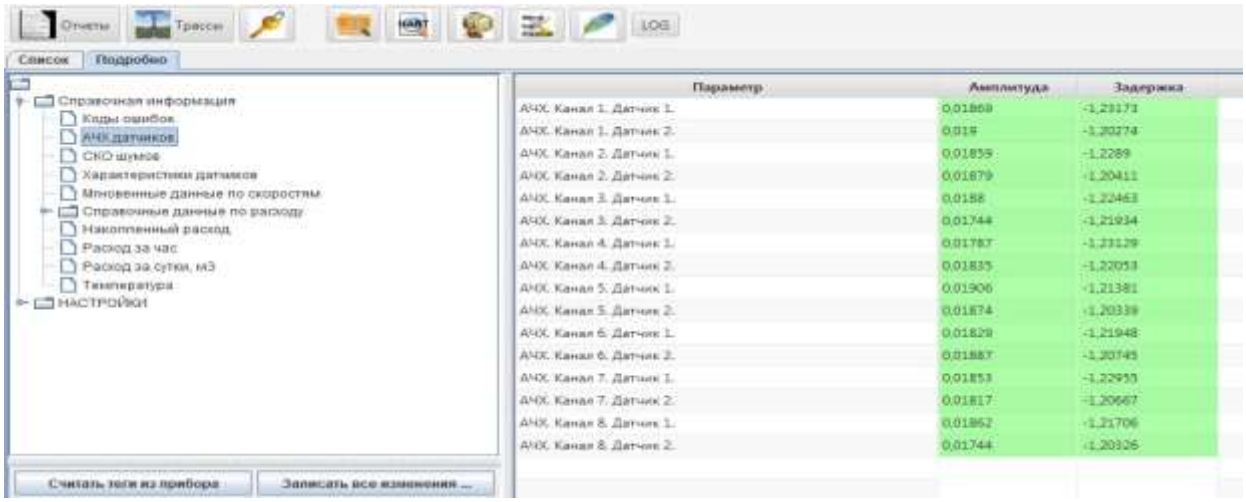

Figure 36 – AFR sensors display

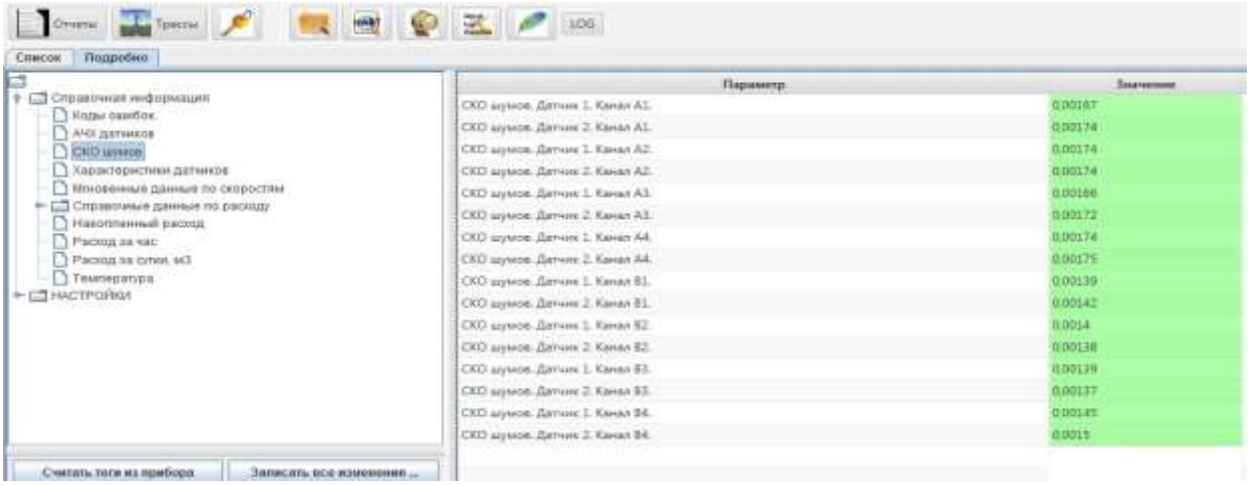

Figure 37 – RMSD sensor noise display

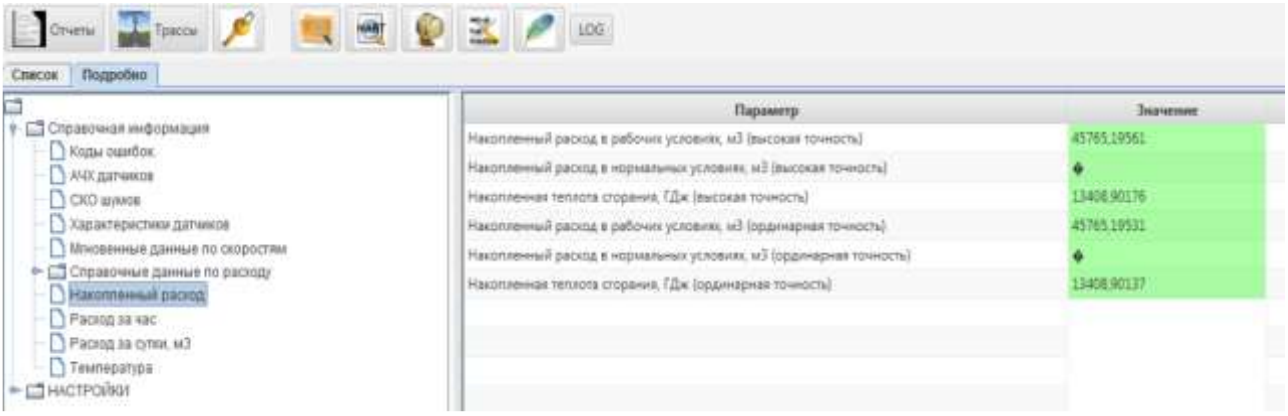

Figure 38 – Accumulated flow display

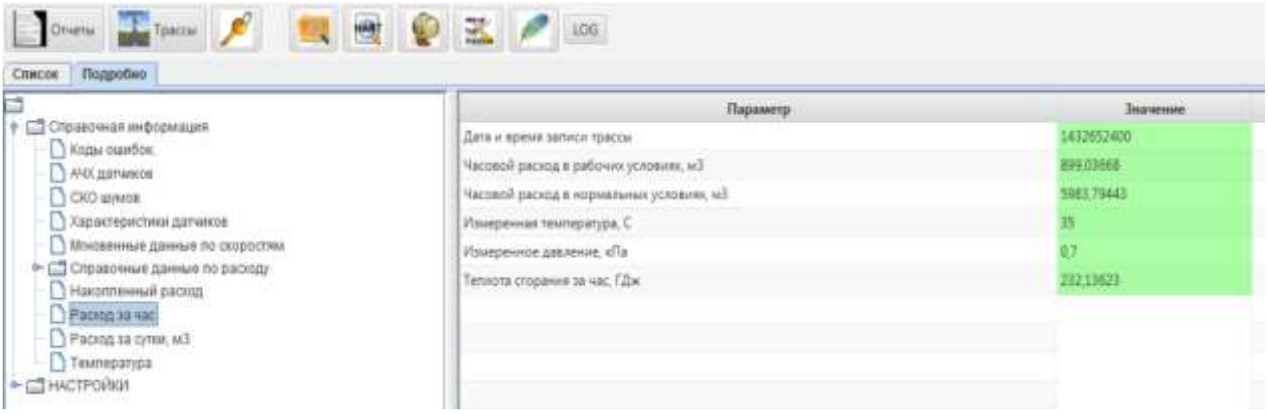

Figure 39 – Hourly flow and other parameters

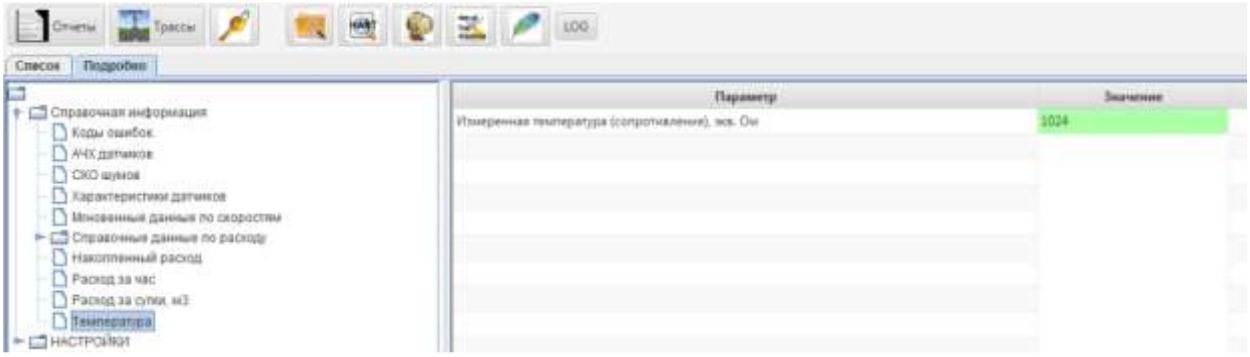

Figure 40 – Measured resistance of temperature transducer

"**Settings**".

This directory helps configure the system for specific operating conditions. It includes the following items:

Geometry: sets the system's internal diameter, length of acoustic path and piezoelectric sensor inclination. These parameters are preset during initial (factory) calibration.

Test parameters: piezoelectric sensor diagnostic parameters – defined by the sensor and measurement section characteristics and operating conditions. This information is to be entered by specialist personnel during pre-commissioning.

Operational parameter settings: these are to be entered by specialist personnel during pre-commissioning.

Program windows are shown in Figures 41–43.

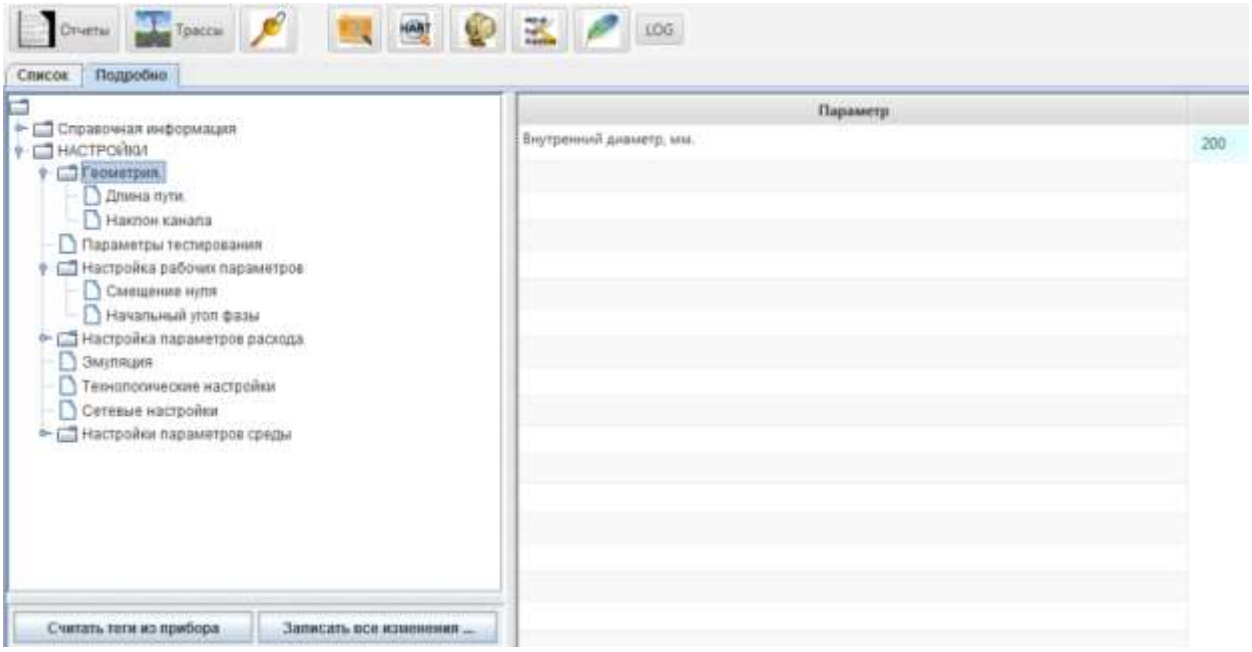

Figure 41 – Geometry

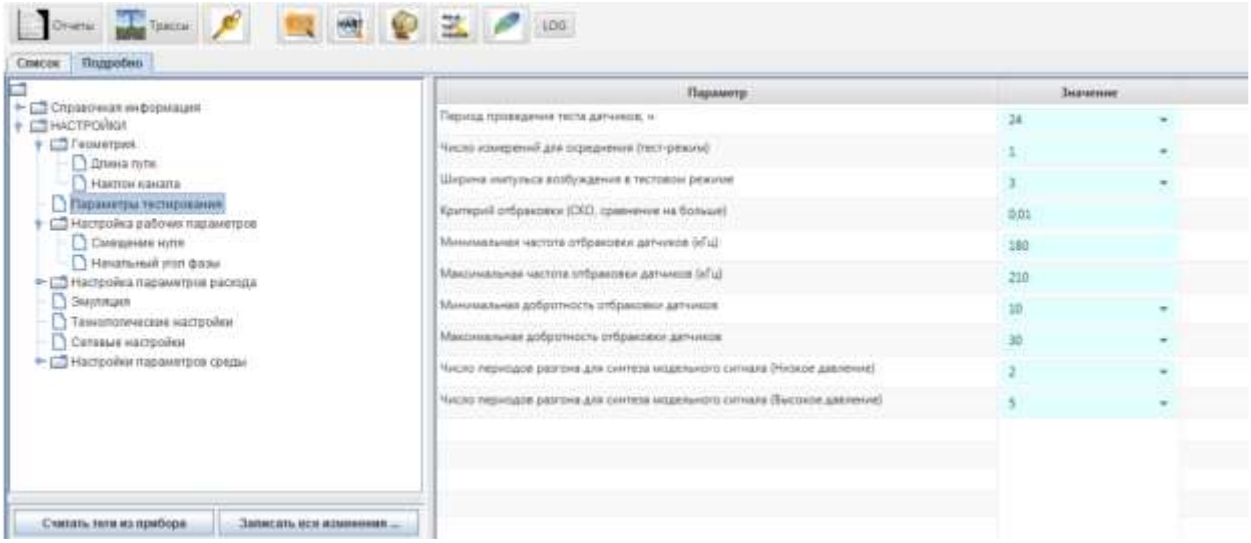

Figure 42 – Piezoelectric sensor test parameters

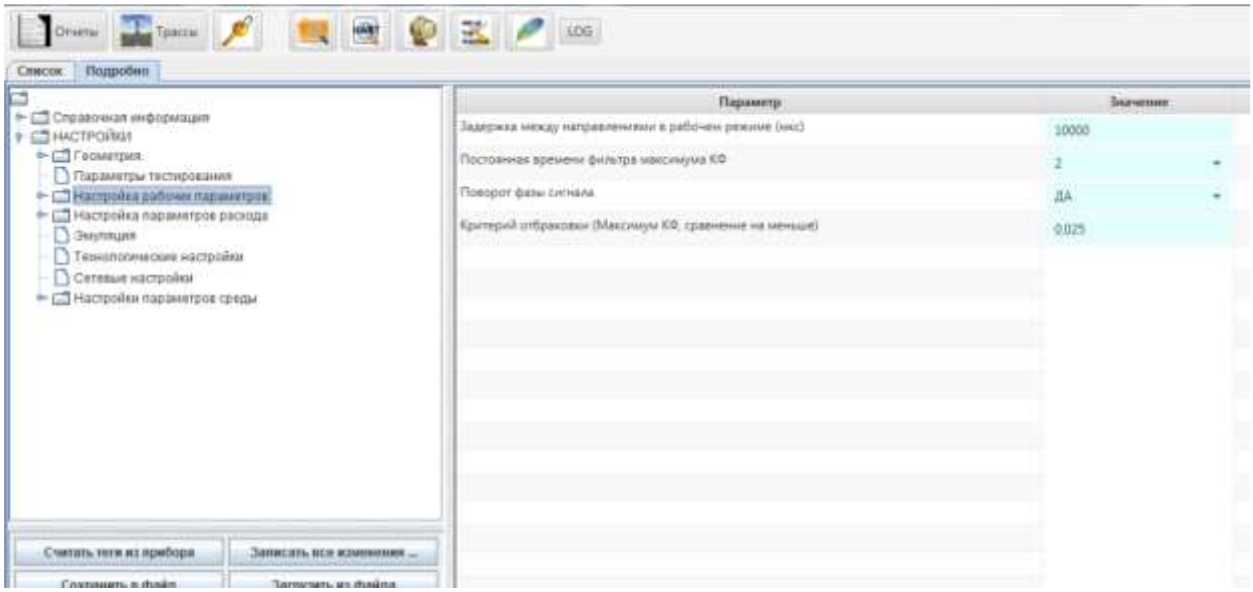

Figure 43 – Operation parameters settings

Flow parameter settings (Figures 44–45):

- start of commercial day: 10 am (by default);
- temperature detector type: from certificate;
- pipeline material: from certificate;
- measured medium: natural gas, air, or other;
- natural gas density calculation method, as defined by the system operator;
- window width for the flow averaging by the moving average method – number of points used for averaging measurement results;
- flow cutoff: minimum operating flow value, if a lesser value is set, the system will register zero flow;
- upper and lower flow margins: both determine the operating flow range in which the system will guarantee the specified accuracy of flow measurement;
- flow direction: direct or reverse flow;
- barometric pressure: this parameter is required if an over pressure detector is used;

- gas density in standard conditions: this parameter is required if either the NX19 or GERG91 method is used. Not used for AGA8;
- component molar fraction is used depending on the selected compression coefficient.

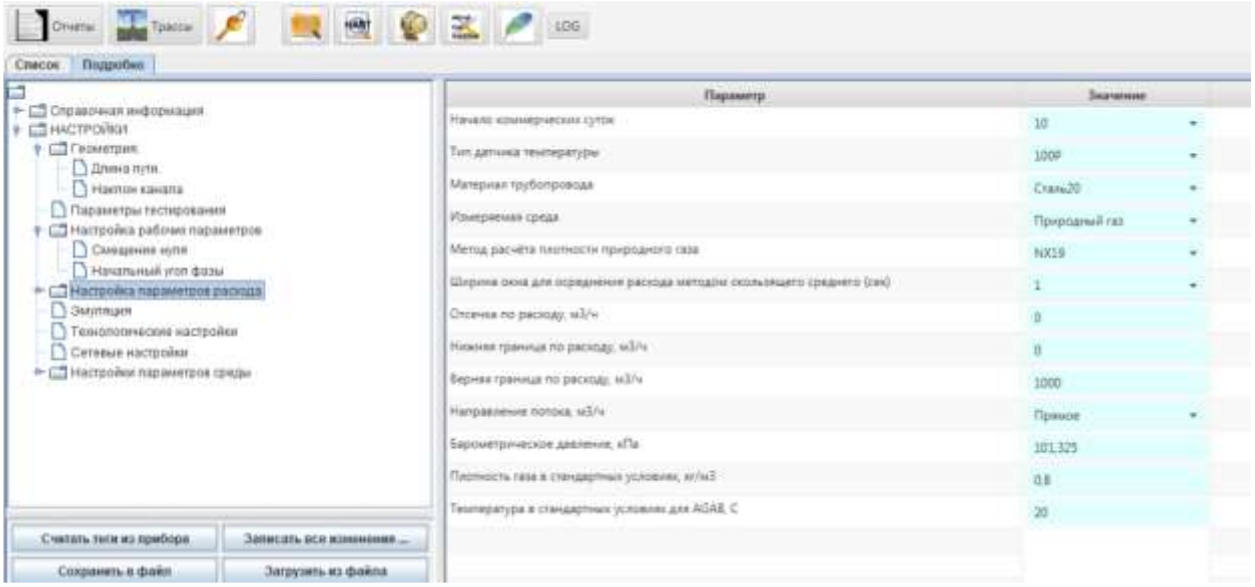

Figure 44 – Flow parameters setting

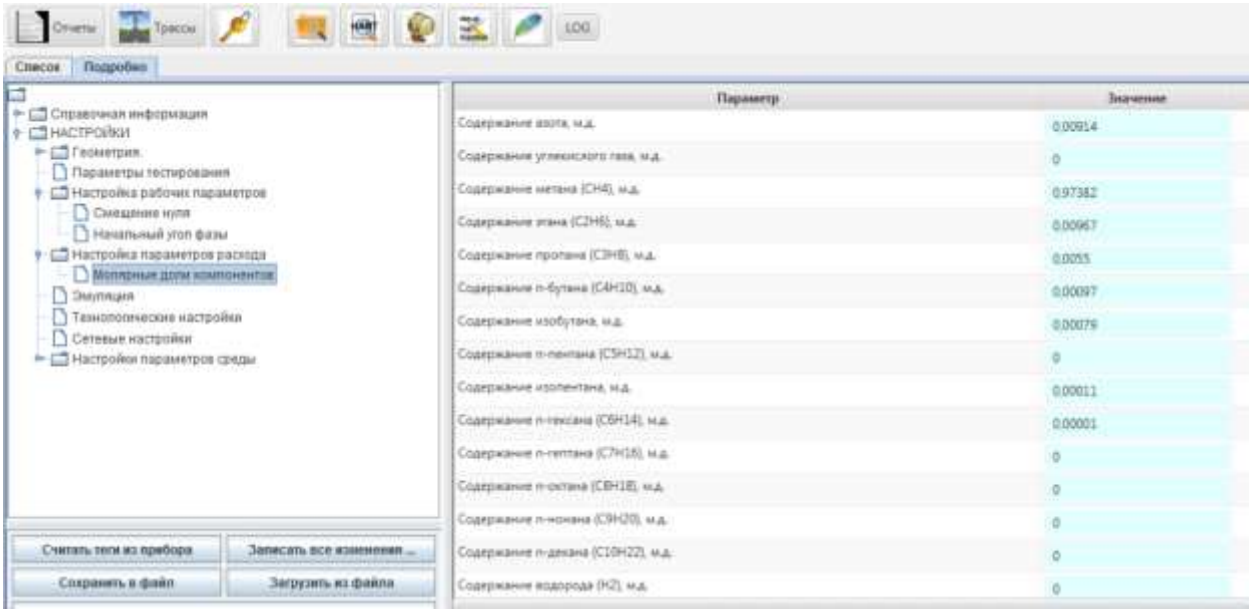

Figure 45 – Component molar fractions

Emulation (Figure 46): special operation mode in which the measured operating flow, pressure and temperature are replaced with previously set constant values.

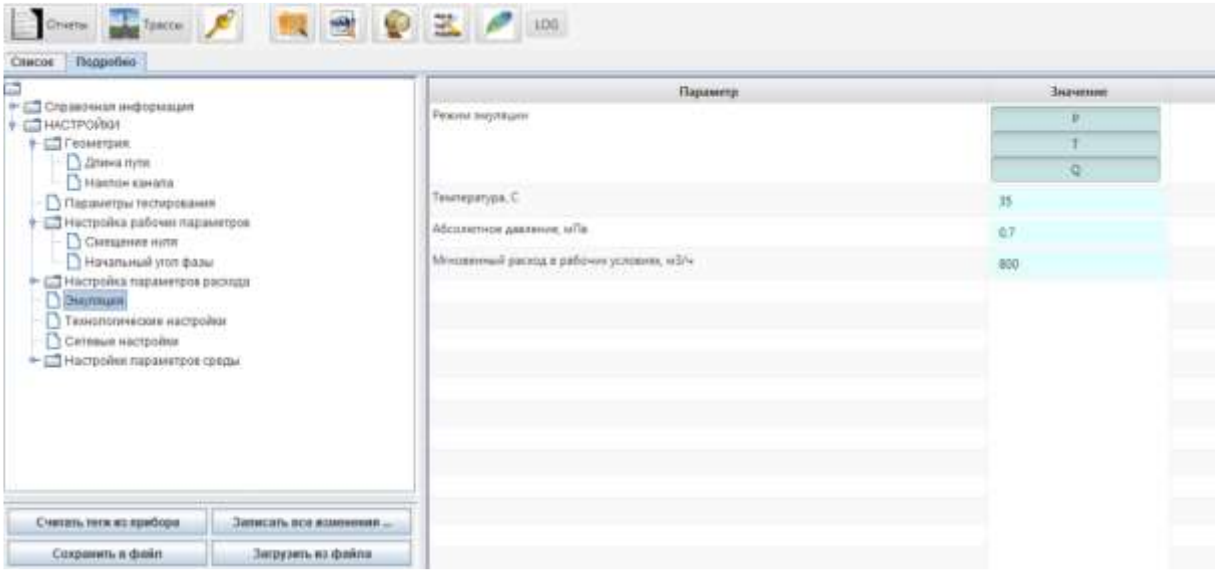

Figure 46 – Emulation

Process settings (Figure 47): these parameters will be entered by pre-commissioning personnel.

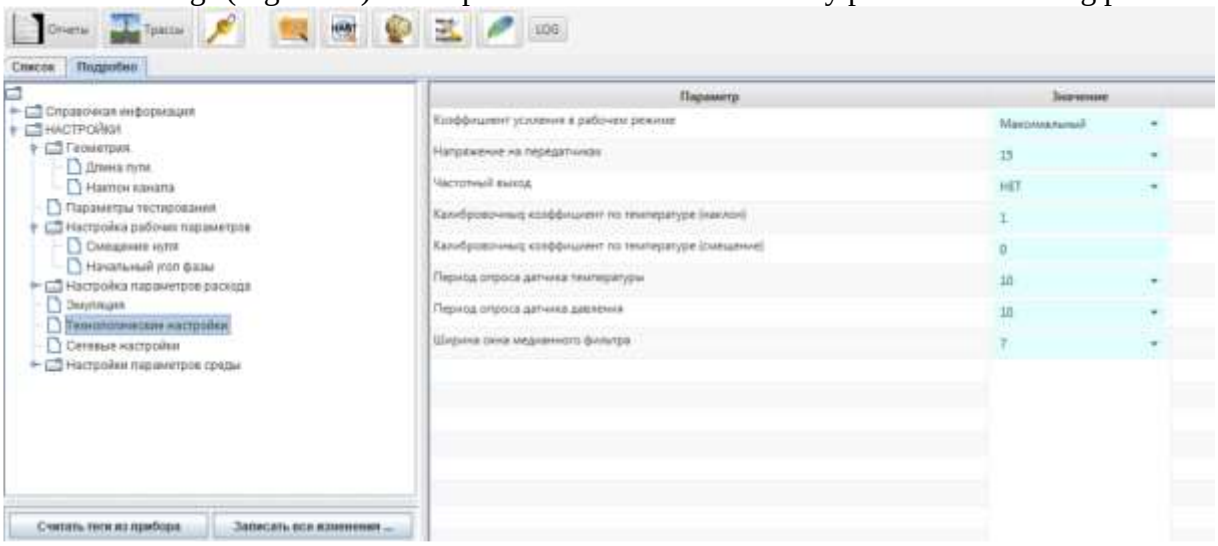

Figure 47 – Process settings

Network settings (Figure 48): address of equipment connected to the PC.

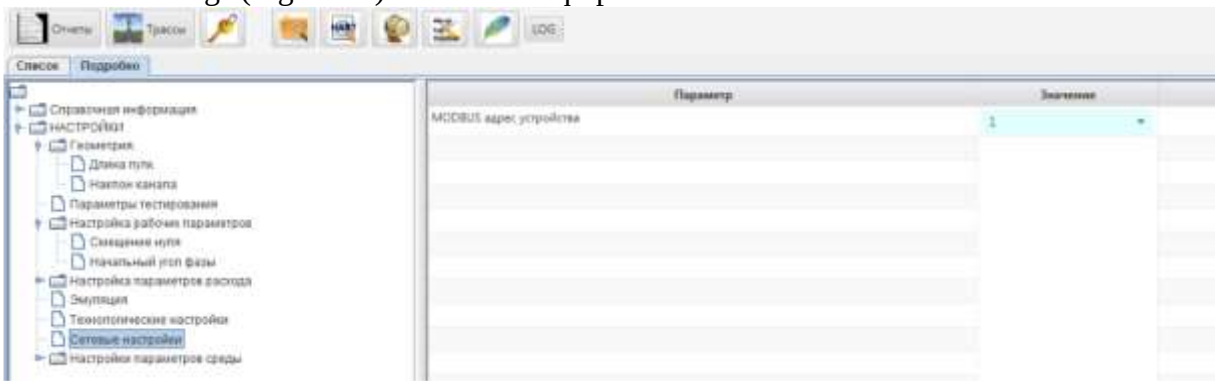

Figure 48 – Network settings

Medium parameter settings (Figures 49–52): required if the measured medium is other than natural gas or air. These parameters are set by the manufacturer based on the configuration data sheet.

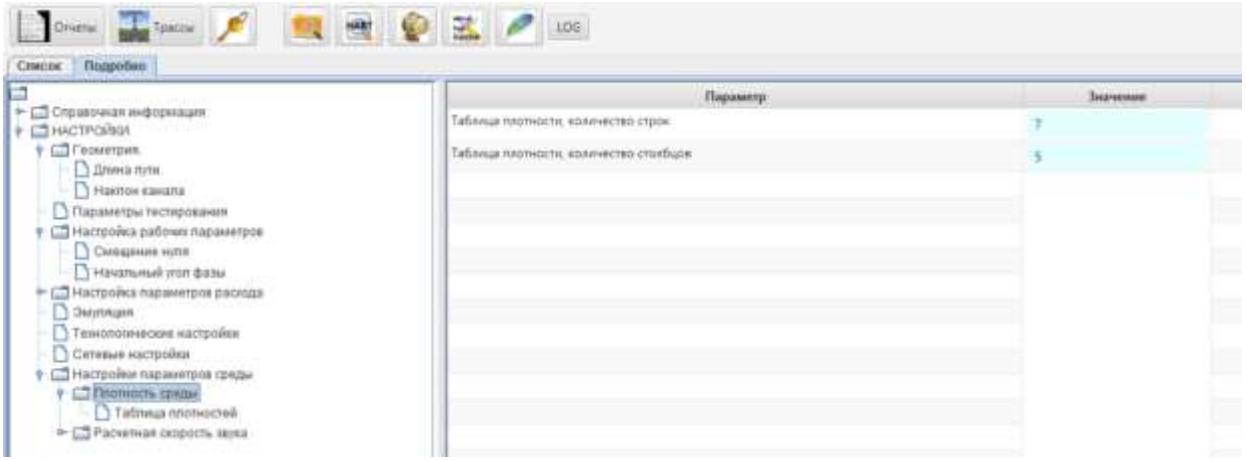

Figure 49 – Medium parameter settings. Medium density

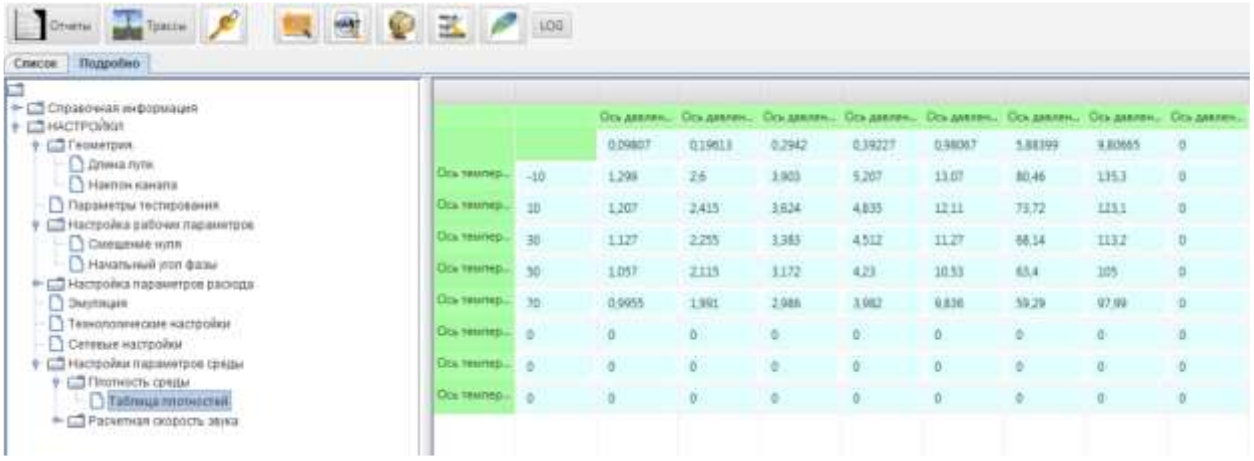

Figure 50 – Medium parameter settings. Medium density. Density table

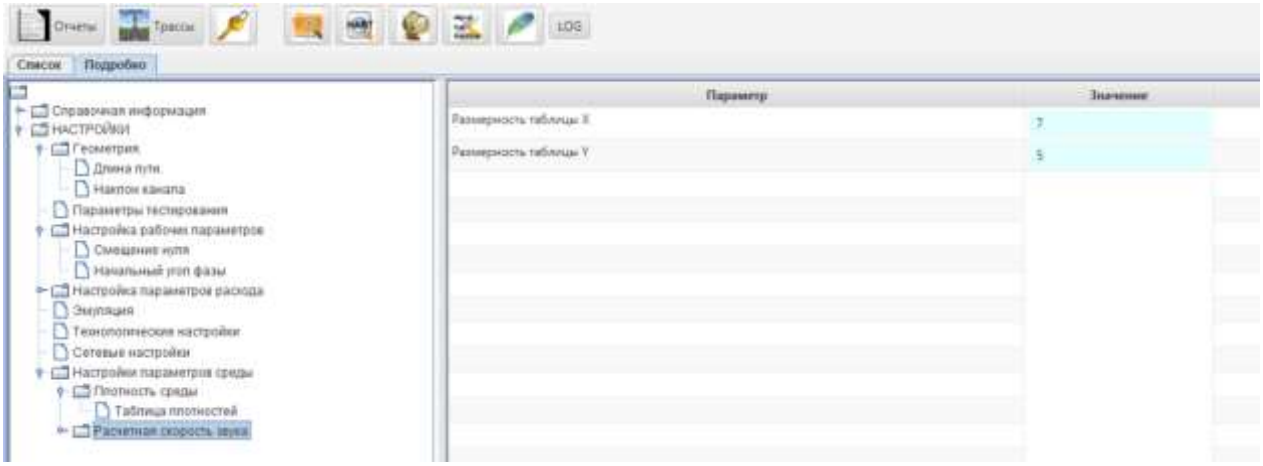

Figure 51 – Medium parameter settings. Estimated sound velocity

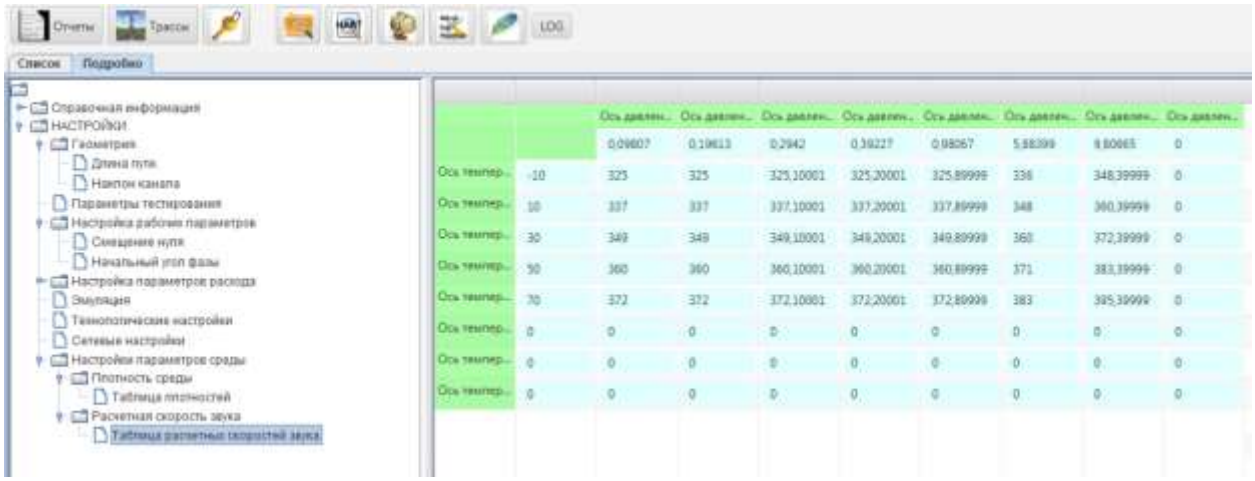

Figure 52 – Medium parameter settings. Estimated sound velocity. Table of estimated sound velocity

To modify settings of the selected directory, left click on the parameter in the right-hand area, change parameter value and press Enter on your keyboard.

To write all modified parameters click on the button "Write all changes…"; once the tags are successfully saved to the system, a corresponding message will be displayed (Figure 53).

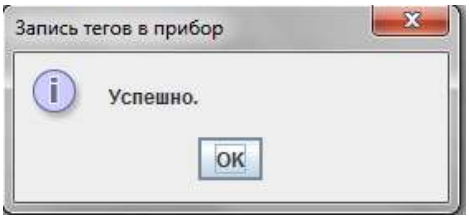

Figure 53

Parameters in the Settings directory can be modified depending on Uniterm user access level (established at login). As a rule, standard access level allows the following parameters to be modified:

- barometric pressure;
- gas density under standard conditions;
- mole fractions of components;
- equipment network address;
- upper and lower limits of flow measurements.

All parameter values set during initial (factory) calibration and pre-commissioning activities are saved to configuration files.

3.7.9 History database (tracks) processing

To display the history database (tracks) window, click on the 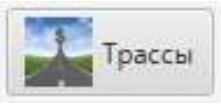

"Tracks" button (Figure 54).

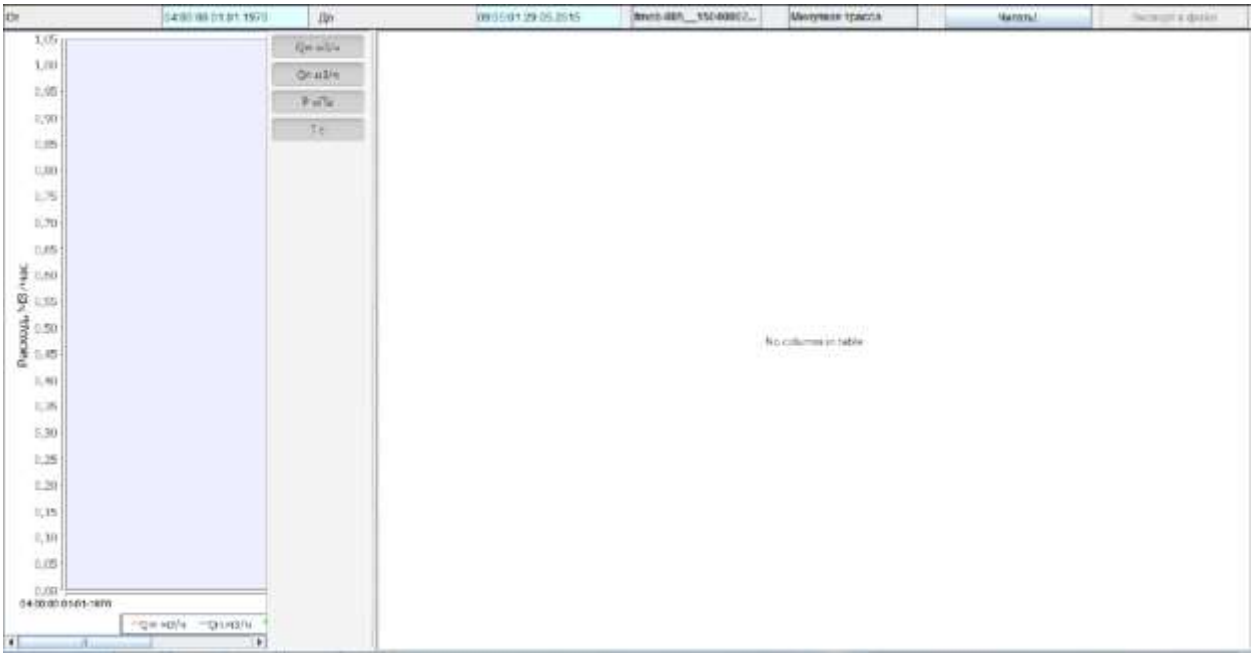

Figure 54

Click the "From" button in the upper section of the window and select the history base recording start time;

Click the "To" button and select the history database recording end time, specify track type by time — "Minute track" or "Hour track" (Figure 55).

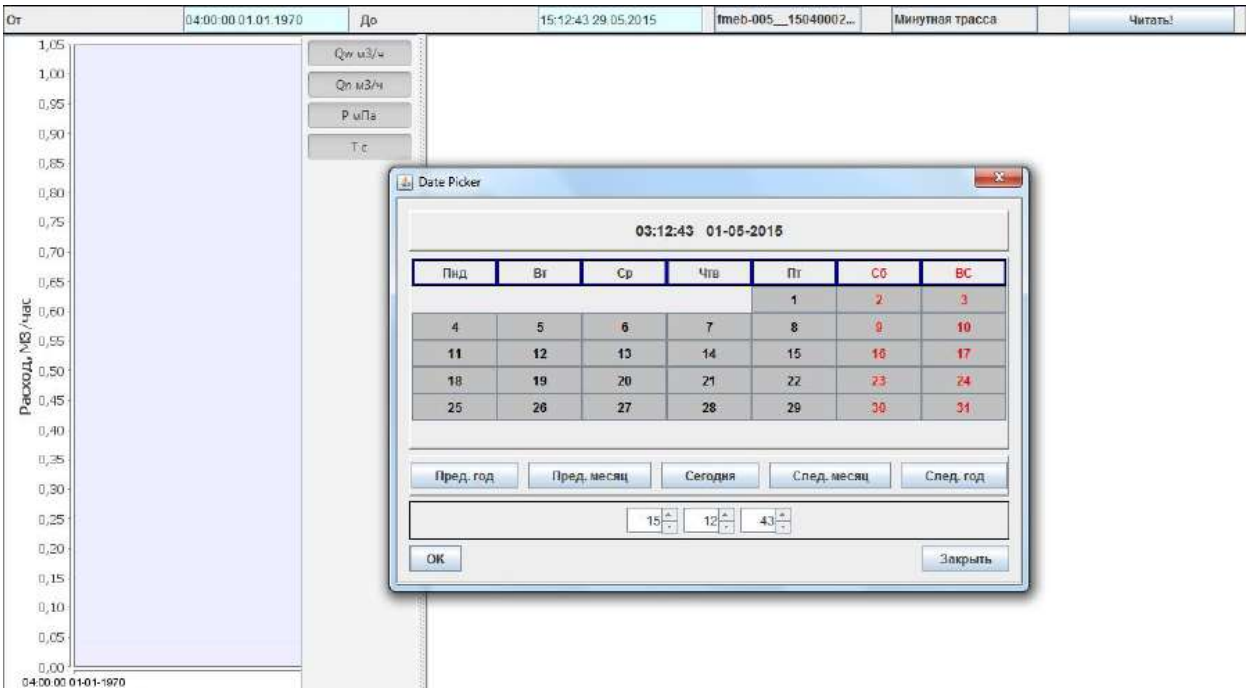

Figure 55

Click the "Read!" button, then click "OK" in the next window (Figure 56).

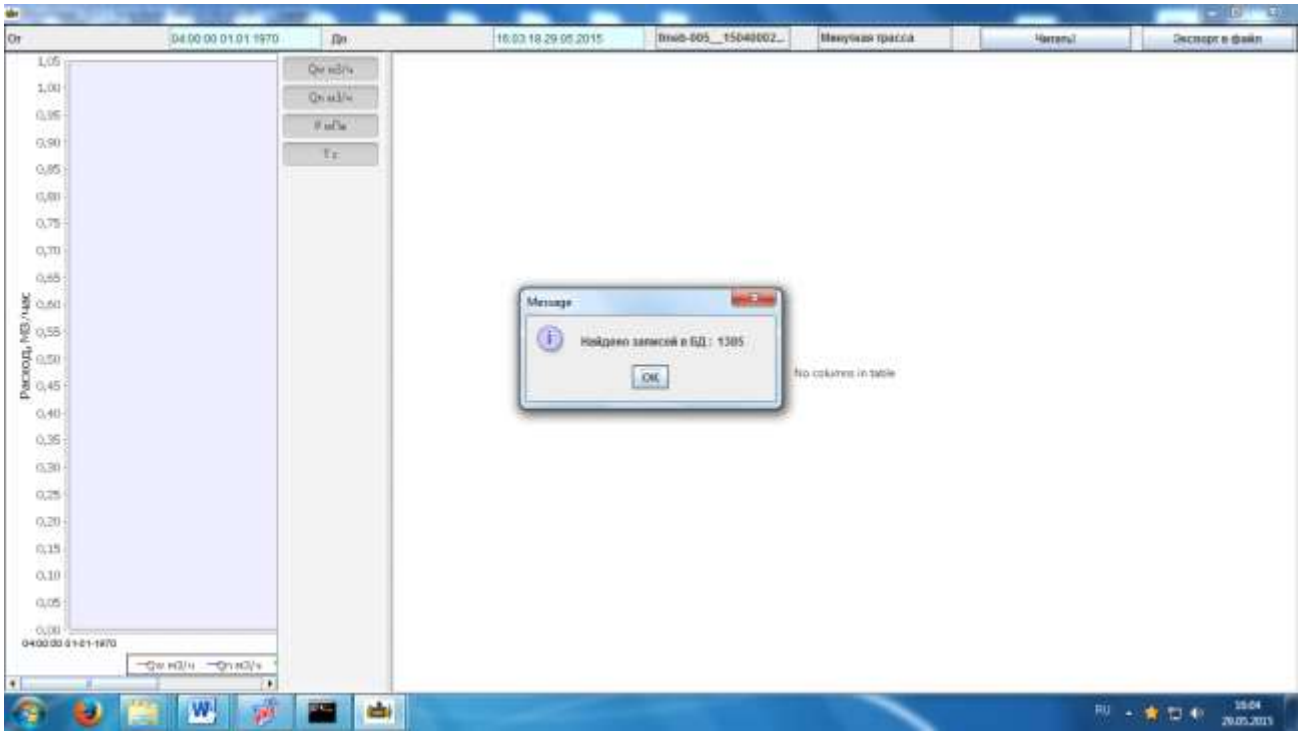

Figure 56

The next window will display "Tracks" in the selected format — in tabular or graphic form (Figure 57)

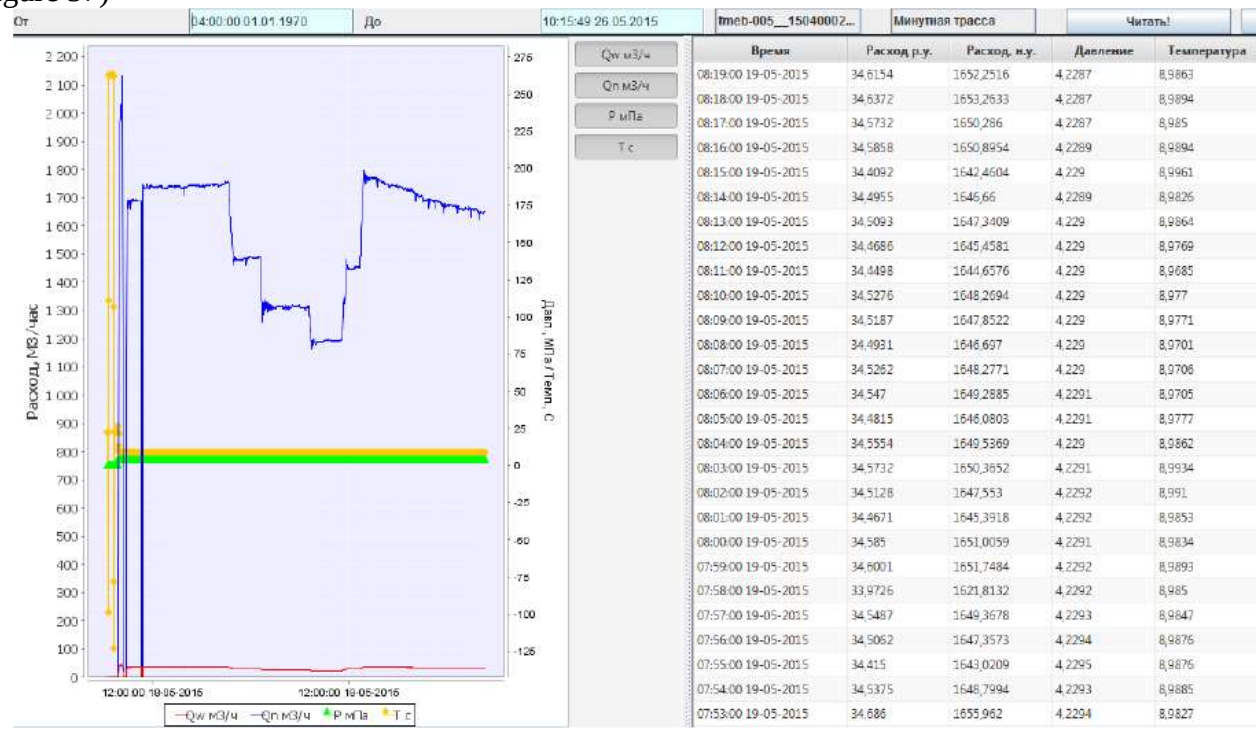

Figure 57

The history databases (tracks) can be saved by clicking the "Export to file" button.

3.7.10 Report preparation

Click on the 

"Reports" button. A dialog window for report processing will appear (Figure 58).

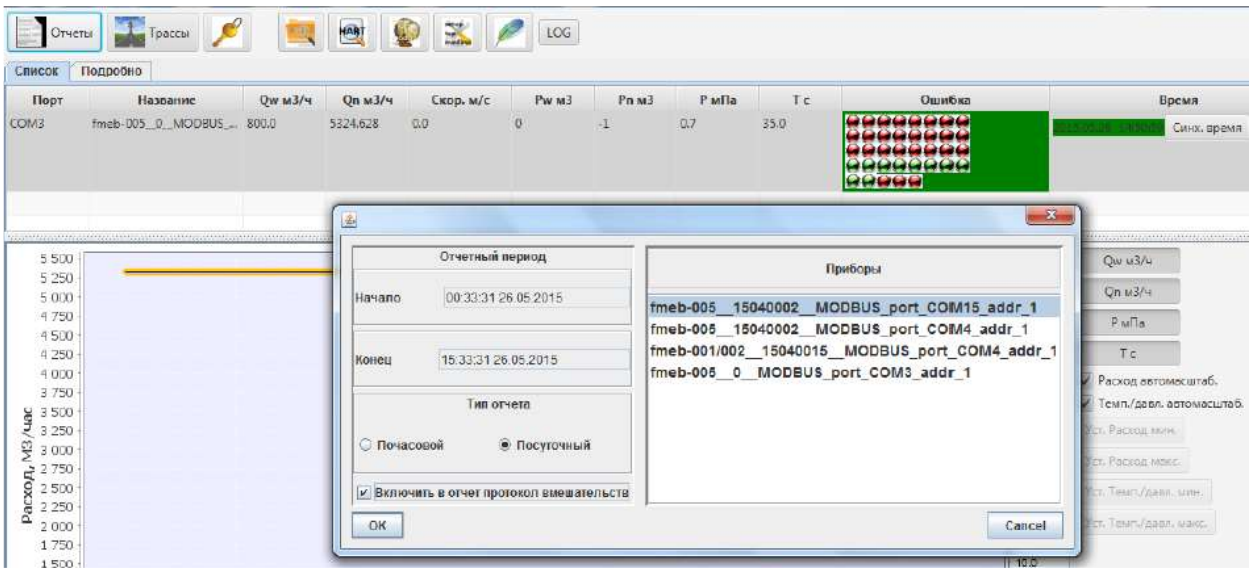

Figure 58

Set "Reporting period" by selecting the following items in sequence:
- period: "Start" and "End" of report;
- report type: "Hourly" or "Daily";
- "Add intervention data base to report" or NOT;
- select devices from "Equipment" list, click OK.

REPORT

Register of Energy Carrier Hourly Parameters

Operator: NPO Vympel LLC

Pipeline diameter	200.0	mm
Pipeline material	Steel 20	
Barometric pressure	1.001	kgf/cm^2
Measured medium	Natural gas	
Gas density under standard conditions	09993	kg/m^3
Nitrogen content	0.1	mol %
Carbon dioxide content:	0.1	mol %

Reported period: from Wed, May 18, 2015 15:54 to Thu, May 20, 2015 15:54

Time	Error		Pressure Flow OC, m3	Flow NC, m3	Q med
2015-05-18 18:00:	0	90.509	200.541	9 111.766	224.246
2015-05-18 19:00:	0	9.202	1 844.835	85 417.41	2 102.171
2015-05-18 20:00:	0	9.092	1 325.761	63 362.5	2 163.967
2015-05-18 21:00:	0	9.1	2 178.438	104 226.016	3 559.544
2015-05-18 22:00:	0	9.085	2 179.005	104 294.63	3 561.888
2015-05-18 23:00:	0	9.082	2 184.318	104 550.39	3 570.622
2015-05-19 00:00:	0	9.09	2 187.444	104 679.21	3 575.022
2015-05-19 01:00:	0	9.103	2 114.707	101 146.734	3 454.38
2015-05-19 02:00:	0	9.127	1 857.837	88 959.78	3 038.169
2015-05-19 03:00:	0	9.142	1 784.357	85 479.58	2 919.313
2015-05-19 04:00:	0	9.15	1 641.213	78 741.3	2 689.186
2015-05-19 05:00:	0	9.149	1 642.103	78 804.945	2 691.36
2015-05-19 06:00:	0	9.156	1 577.367	75 737.016	2 586.583

Reported period: from Wed, May 18, 2015 15:54 to Thu, May 20, 2015 15:54

Time	Error		Pressure Flow OC, m3	Flow NC, m3	Q med
2015-05-19 07:00:	0	9.16	1 488.238	71 517.42	2 442.475
2015-05-19 08:00:	0	9.151	1 585.549	76 178	2 601.644
2015-05-19 09:00:	0	9.129	1 903.721	91 289.93	3 117.749
2015-05-19 10:00:	0	9.08	2 217.045	105 972.375	3619.186
2015-05-19 11:00:	0	9.01	2 190.866	104 710.01	3 576.074
2015-05-19 12:00:	0	8.971	2 173.597	103 858.39	3 546.989
2015-05-19 13:00:	0	8.937	2 133.531	101 922.164	3 480.863
2015-05-19 14:00:	0	8.966	2 114.063	100 959.46	3 447.984
2015-05-19 15:00:	0	8.985	2 095.794	100 072.81	3 417.703
2015-05-19 16:00:	0	8.986	2 083.936	99 490.22	3 397.807
Total			42704.0648	2040482.0547	68784.924

3.8 Emergency response

3.8.1 Emergency situations are associated with gas accumulation within the system installation area. Emergency response measures:

- turn the equipment off;
- detect the leak’s location by applying soap solution to junction points;
- eliminate the gas leak by replacing sensor sealing rings, flange gaskets, etc.;
- re-check the repaired junction for integrity.

Turn the system on and continue operation.

4 Maintenance

4.1 General

4.1.1 System maintenance involves monitoring the technical condition and maintaining serviceability of the system. Additional objectives of regular maintenance are failure prevention and service life extension.

All maintenance procedures are to conform to GOST 30852.16-2002 "Explosion proof electric equipment. Section 17. Inspection and maintenance of electric installations in explosion hazard areas (except underground mines)".

The technical manager of the operating company shall be responsible for managing all maintenance activities.

Before starting industrial operation of the system, the operator shall assign a specific person responsible for system operation.

4.1.2 The system equipment must be operated by persons who have passed a special training course and have authorization to perform maintenance and operation activities.

4.1.3 Commissioning and maintenance of the system by the Customer's employees shall conform to these Operating Instructions.

All maintenance procedures are to be listed in the Maintenance Register VMPL1.456.005 FO and approved by the person responsible for operation.

If the equipment is not operated/not maintained for an extended period of time, turn off the uninterrupted power supply, prepare a report about the interruption of operation/maintenance and make a corresponding record of this in the form , VMPL1.456.005 FO (Section 12).

After turning the equipment on, prepare a technical inspection report and make a corresponding record in the form, VMPL1.456.005 FO (Section 12).

4.1.4 System maintenance involves periodical calibration in accordance with the Calibration procedure VMPL1.456.005 MP and inspection of technical conditions as per sub-paragraph 4.7. Within the specified calibration interval, the device metrological parameters shall comply with standard norms provided that the user properly observes the storage, transportation and operation guidelines of these Operating Instructions.

Repairs that require the removal of seals shall only be performed by the manufacturer or authorized contractor.

4.2 Safety measures

4.2.1 The system's protection against electric-shock hazard conforms to Class I GOST 12.2.007.0-75.

Operation of the system shall conform to GOST 30852.16-2002, the “Electrical Installation Code” (Section 7.3), “Regulations for the Operation of Consumer Electrical Installations” (Section 3.4) and other norms and standards for electric equipment in explosion hazard areas. This device is not intended for measuring products that are aggressive to the materials that are in contact with the measured product. Do not connect/disconnect cables on live equipment.

4.3 Explosion protection during maintenance and technical inspection

4.3.1 Equipment operation and maintenance may only be performed by personnel familiar with these Operating Instructions and certified to operate explosion proof equipment. Operation and maintenance procedures shall include all measures specified in Sections 2 and 3 of these Operating Instructions.

In addition, operating/maintenance personnel are to follow the guidelines listed in the Regulations for the Operation of Consumer Electrical Installations, Interindustry Occupational Safety Rules (safety regulations) during the Operation of Electric Installations POT RM-016-2001.

During operation, the equipment is to be subject to regular external inspection and preventive maintenance.

External inspection includes checking:

- seal integrity;
- proper fixation of electronics module covers;
- breakdown/damage to power and communication cable insulation;
- grounding wire conditions;
- proper cable fixation;
- proper fixation of equipment and grounding bolt;
- dents, visible mechanical damages, dust, dirt on the enclosure.

4.3.2 During maintenance:

a) check the proper assembly of cable entries and the integrity of sealing components (broken or cracked seals are to be replaced);

b) when installing electronics module covers, check that the cover is affixed properly, including fixing bolts and locking screws.

DO NOT operate damaged or faulty equipment.

Servicing, which does not require that the equipment be turned off (for example, tightening fixing bolts and nuts), can be performed as part of the external inspection of the whole system.

Regular preventive maintenance shall include the above-mentioned external inspection measures. The specific frequency of preventive inspections is dependent on operating conditions, but is not to be less than once a month. Upon completion of preventive maintenance, reconnect the cable and seal the equipment. Configuration of equipment in an explosion hazard location shall conform to GOST 30852.13-2002.

4.4 Maintenance procedure

4.4.1 Maintenance involves periodic calibration and inspection of the system's technical condition.

Within the specified calibration interval, the device’s metrological parameters will comply with standard norms of operational safety, provided that the user properly observes the storage, transportation and operation guidelines laid out in these Operating Instructions.

If the piezoelectric sensors are dirty, the VMPL3.857.001 electronics module diagnostic system outputs a corresponding error code. To remove dirt, relieve the pipeline pressure, dismantle the sensors and clean dirt off the sensors and their seats. This procedure must be performed by a trained and certified specialist.

To replace faulty sensors or dismantle sensors for cleaning, you can use a specific tool developed by NPO Vympel and shipped under a separate order.

After cleaning, all seal rings must be replaced with new ones.

All maintenance that is performed must be recorded in the form, VMPL1.456.005 FO. Recommended maintenance procedures and periods are presented in Table 17.

Table 17

Operation	**Method**				**Note**
	Weekly	Monthly	Quarterly	Annually	
Check sealing and connection elements of piezoelectric sensors, pressure detector and resistive temperature transducer	–	+	+	+	
Check zero signal in the pressure channel	–	+	+	+	
Cleaning piezoelectric sensors	–	–	–	–	Following diagnostics
Check for explosion protection compliance	–	–	+	+	In accordance with KRAU2.222.002-04 RE

Check the main technical parameters – in accordance with form VMPL1.456.005 FO, at least once a year.

Correction of the pressure detector zero signal is carried out in accordance with paragraph 3.6.5

4.5 Functional check

4.5.1 The technical conditions of the system are to be checked during operation (on site or in laboratory conditions).

On-site inspection normally involves monitoring error codes from the electronics module VMPL3.857.001 diagnostics system. If there is no signal to the electronics module, the electronics module's built-in indicator displays an error code and 8-bit digital error message. The list of possible errors is presented below:

Error codes 1:
00000001: channel A1 sensor 1 test error
00000002: channel A2 sensor 1 test error
00000004: channel A3 sensor 1 test error
00000008: channel A4 sensor 1 test error
00000010: channel B1 sensor 1 test error
00000020: channel B2 sensor 1 test error
00000040: channel B3 sensor 1 test error
00000080: channel B4 sensor 1 test error
00000100: channel A1 sensor 2 test error
00000200: channel A2 sensor 2 test error
00000400: channel A3 sensor test error
00000800: channel A4 sensor 2 test error
00001000: channel B1 sensor 2 test error
00002000: channel B2 sensor 2 test error
00004000: channel B3 sensor 2 test error
00008000: channel B4 sensor 2 test error
00010000: channel A1 error in operating mode
00020000: channel A2 error in operating mode
00040000: channel A3 error in operating mode
00080000: channel A4 error in operating mode
00100000: channel B1 error in operating mode
00200000: channel B2 error in operating mode
00400000: channel B3 error in operating mode
00800000: channel B4 error in operating mode
01000000: channel A measurement error
02000000: channel B measurement error

Error codes 2:
00000001: temperature error
00000002: pressure error
00000004: velocity error
00000008: flow error
00000010: in flow cut-off
00000020: in minimum flow limitation
00000040: in maximum flow limitation
00000080: beam failure compensation condition (higher measurement accuracy)
00000100: temperature emulation mode enabled
00000200: pressure emulation mode enabled
00000400: flow emulation mode enabled

To diagnose and eliminate any other errors, please contact the Manufacturer's Customer Service.

The seal integrity of the electronics module casing and terminal box cable entry is to be inspected visually.

4.6 Possible failures during operation and troubleshooting

4.6.1 Possible failures and off-nominal situations during operation and troubleshooting measures are presented in Tables 18 and 19.

Table 18 – Error code 1

Failure, error code	Cause	Troubleshooting
Red indicator in the diagnostics window. The error code is identified when the cursor is pointed over it.	00000001 00000002 00000004 00000008 00000010 00000020 00000040 00000080 00000100 00000200 00000400 00000800 00001000 00002000 00004000 00008000 00010000 00020000 00040000 00080000 00100000 00200000 00400000 00800000 01000000 02000000	Failure or severe contamination of piezoelectric sensors

Table 19 – Error code 2

Failure, error code	Cause	Troubleshooting	
Red indicator in the diagnostics window. The error code is identified when the cursor is pointed over it.	00000001	Temperature sensor failure	Repair or replace the resistive temperature transducer
	00000002	Pressure sensor failure	Repair or replace the pressure sensor
	00000004	Critical deviations in velocity measurement channels	Check velocity measurement channel elements (piezoelectric sensors, cables, electronics module)
	000000008	Incorrect parameters (P, T, components, etc.)	Enter correct parameters in the terminal program
	00000010 00000020 00000040 00000080 00000100 00000200 00000400	Standard situation	For your information (special modes are on, measurement accuracy deviations are possible)

Full diagnostic data and available failure characteristics are available to personnel with "Service" access level.

4.7 Technical examination

4.7.1 General

The technical inspection of flow, volume, pressure, temperature, time measurement functions, as well as calculation functions (gas flow and volume calculations and reduction to standard conditions) is to conform to method VMPL1.456.005 MP.

Measurement methods (techniques):

- GOST 8.611-2013 GSI. “Gas flow rate and quantity. Ultrasonic Flow Transducer Measurement Method (Technique)".
- MI 3213-2009 GSI. “Gas flow and volume. Ultrasonic Flow Transducer Measurement Method (Technique)”.

5 Maintenance of device components

5.1 Installation and deinstallation

5.1.1 When installing the device:

- device components are to be installed in explosion hazardous zones in accordance with the requirements of GOST 30852.13-2002, the Electrical Installation Code (Section 7.3), Regulations for the Operation of Consumer Electrical Installations (Section 3.4), these Operating Instructions, and other relevant documents, which regulate activities in hazardous industrial facilities;

- prior to installation, check the availability of explosion protection, the state of the electrical equipment, and the availability of fastening and sealing elements which provide explosion protection;

- take measures to prevent mechanical damage when installing device detectors;

- the device's external electrical connections are to be protected against mechanical damage by means of a gasket in the metal hose;

- confirm the integrity of connections to the external and internal earthing terminals of the device‘s components;

During installation operations, tools are to be used in accordance with Table 15.

The Vympel-500 ultrasonic measurement system does not contain mechanically moving parts. It is supplied to the Customer as a completely assembled monoblock, inspected at the factory and with an external enclosure installed.

The measurement chamber and the piezoelectric sensors are the only components that come into contact with the gas medium. The use of titanium and high-quality stainless steel ensure that these elements are protected against corrosion, on the condition that the device is installed and operated according to the corresponding technical specifications.

As a result, the Vympel-500 ultrasonic measurement system does not require substantial maintenance. In general, maintenance is limited to regular inspections that are carried out in order to check the accuracy of the measured values and the diagnostics results that are output by the system (for detailed information refer to the calibration procedure described in VMPL1.456.005 MP and Section 3 of these Instructions).

5.2. Preservation

5.2.1 Before being packed for transportation or storage, the devices are to undergo preservation procedures in accordance with the requirements of GOST 9.014-78 (protection variant B3-10) and the documentation for packing accoding to the specific design. Before packing, the openings for the pressure detector are to be closed with caps, and the connection points of the electronics set are to be closed with covers, in order to prevent contamination of internal cavities and to avoid mechanical damage to threads.

6 Routine repairs

6.1 General

The device is to be repaired in accordance with GOST 30852.18-2002 “Explosion proof electric equipment. Part 19. Repair”.

The scope of regular repairs and intervals between specific repairs as well as the need to perform said repairs are to be set according to the industrial system of predictive and preventive maintenance with regard to operating conditions.

The operating personnel **are ABSOLUTELY NOT** to perform repairs of the device that are connected with the recovery or manufacture of its components that provide explosion protection. Such repairs are ONLY to be done by service providers, which have licenses to do repairs of explosion proof equipment.

Device repairs that can be carried out without compromising the explosion protection, are to be performed by the operations services of the enterprise in accordance with the applicable Safety Rules, Regulations for the Operation of Consumer Electrical Installations, Occupational Safety Rules POT R M-016. The employee responsible for operating electrical equipment is to be responsible for its calibration and repairs.

6.2 Safety measures

During repair operations, all safety measures are to be observed as indicated in the Regulations for the Operation of Consumer Electrical Installations, Interindustry Occupational Safety Rules during the Operation of Electrical Installations (POT R M-016-2001).

7 Storage

7.1 Packaged devices shall be stored in storage facilities of the consignor and consignee, which protect devices from mechanical damage, contamination and the impacts of corrosive media, in storage conditions “2” according to GOST 15150.

The devices can be stored in the transport packaging for up to 6 months. If stored over 6 months, the devices shall be unpacked and stored in storage conditions “1” according to GOST 15150-69.

The information about preservation of the device or its components is to be recorded in form VMPL1.456.005 FO, section 8, and the storage information is to be entered in section 15.

General requirements for device storage in heated storage facilities are to comply with GOST R 52931-2008.

7.2 The device is packed in accordance with the engineering documents of the manufacturer, in closed ventilated premises at ambient temperature from +15 °C to +40 ° C, relative air humidity of up to 80%, and with no corrosive impurities in the surrounding air.

The packaging shall ensure the integrity of equipment during handling, transportation and storage and protect the equipment from climatic and mechanical loads.

The device packaging contains means for its amortization in the transport container.

Operational and shipping documentation shall be wrapped with water-proof material and put under the container cover on the upper layer of the packaging material.

8 Transportation

8.1 General requirements for the transportation of devices are to comply with GOST R 52931-2008.

The packed devices us to be transported in closed transportation by any means of transport (except by sea), including by air, in a heated pressurized compartment in accordance with shipping rules in effect for each respective means of transport.

Transportation conditions with regard to climatic impact are to correspond to group 5 conditions in accordance with GOST 15150-96 for covered means of transport.

Transportation conditions with regard to mechanical impacts shall correspond to group F3 conditions in accordance with GOST R 52931-2008.

9 Disposal

9.1 Materials and components used in the manufacture of the ultrasonic measurement system Vympel-500, both during its operation lifetime and after the resource expiry, do not constitute a danger for human health, industrial production, storage premises, and the environment. Faulty devices or devices with expired resource can be disposed of by any appropriate method available to the user.

Appendix A
(obligatory)

The procedure for compiling reference designations when ordering the Vympel-500 ultrasonic measurement system and data sheet

The following reference designation protocol is to be followed when ordering devices and in documents for other items:

Ultrasonic measurement system Vympel-500 – 500 – 10 – 1 – 01 – TP – DK

1 2 3 4 5 6 7

1 – device designation

2 – nominal pipe diameter (DN80–1400)

3 – maximum operating absolute pressure, MPa (1.6 ..27.5);

4 – number of electronics units in one set (1 or 2);

5 – version (01 — flanged, 02 — flange-less measuring chamber);

6 – resistive temperature transducer (body-mounted — TN, submerged — TP);

7 – additional channel for control of internal pipe surface contamination (if available — DK)

Vympel-500

SPA Vympel, LLC
Dedovsk,
www.vympel.group

Tel./Fax +7 (495) 992-30-60 70
email: dedovsk@npovympel.ru, info@npovympel.ru

Data sheet for ordering the Vympel-500 ultrasonic measurement system

The data sheet is the basis for determining the configuration and price of the flow meter.
Please answer every question.

Customer: City

Tel/fax email
Contact person
Name of the object

Application: commercial metering ☐ process metering ☐

Measured medium: natural gas ☐ compressed air ☐ process gases ☐ other

Measurement accuracy in operating conditions: ±0.3% ☐ ±0.5% ☐ ±0.7% ☐

Parameters of the measured medium:

Absolute operating pressure of the medium, MPa: min. max.
Temperature of the medium, °C: max. min.
Normalized volumetric flow, m^3/hour: max. min.
Density of the medium under standard conditions at preset compositional analysis (typical)
Concentration of mechanical impurities, mg/m^3

Compositional analysis of the measured medium							
No.		Volume percent		No.		Volume percent	
		min.	max.			min.	max.
1				7			
2				8			
3				9			
4				10			
5				11			
6				12			

Pipeline requirements (flanged or flange-less measuring section):

Nominal diameter DN (80–1400) Abutting pipe: diameter, mm Wall thickness, mm

Component materials: St.20 ☐ 09G2S☐ Other Flanges: flange-less ☐ GOST ☐ ANSI ☐
Ambient temperature, ℃:

Thermotransducer type: submerged ☐ body-mounted ☐ Pressure detector: absolute ☐ excess ☐

Additional equipment: interface unit ☐ GSM modem ☐ UPS-24 V ☐
Other requirements/comments/features:

A diagram of the flow meter connections at the facility is to be attached to the data sheet specifying the distances to local resistances

Design organization: Contact person's full name, tel.:
Executed by: _____ _____ _____
Position Signature Full name
Stamp here _____(date) 20

Appendix B
(reference)

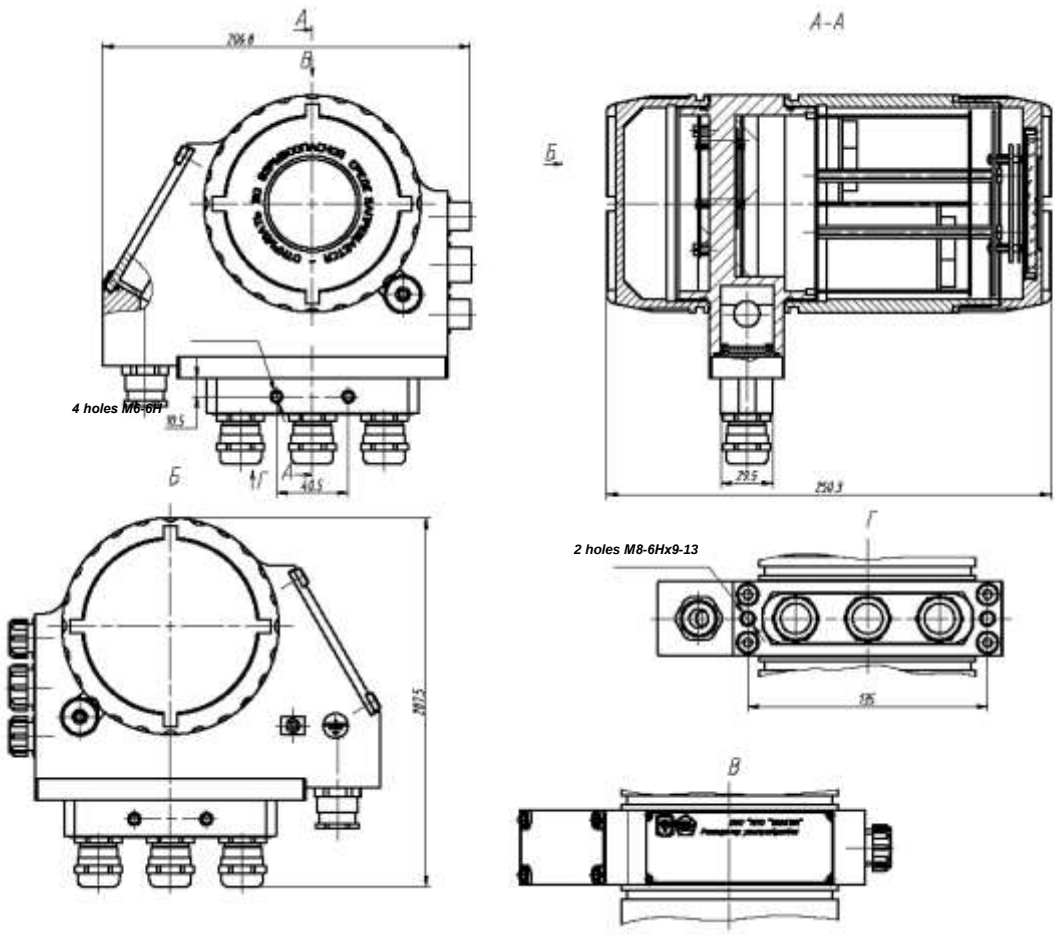

Figure B.1 – Electronics unit VMPL3.857.001

Appendix C

(reference)

Overall and installation dimensions of device components

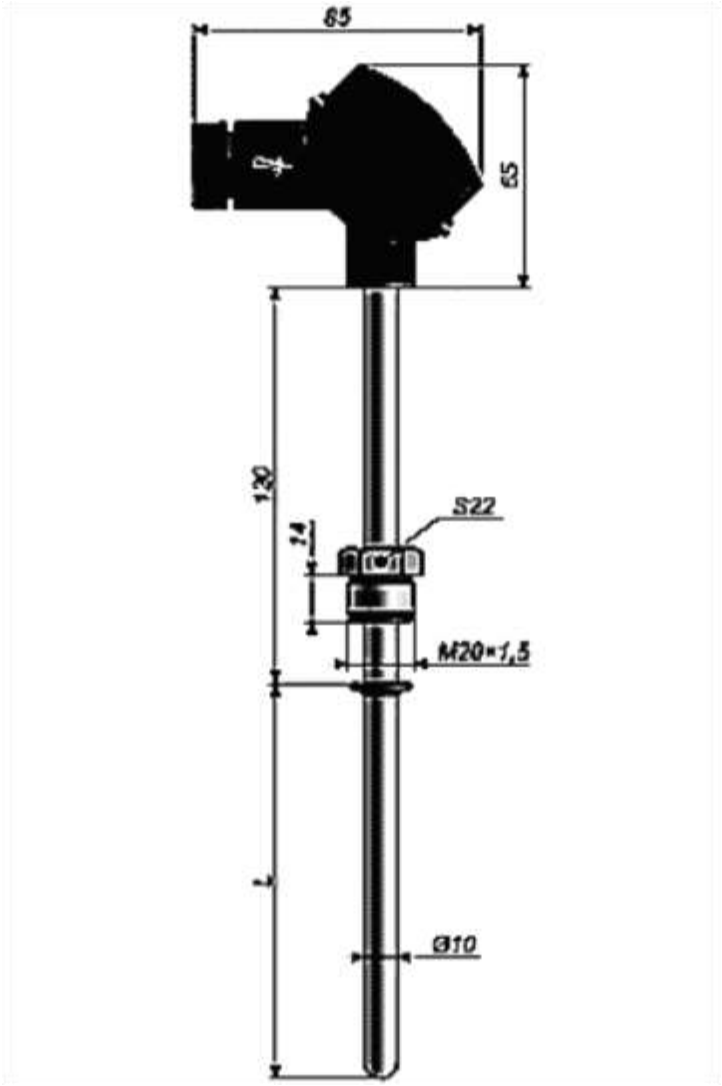

Cable length at standard supply L=3 m

Figure C.1 – Submerged resistive temperature transducer

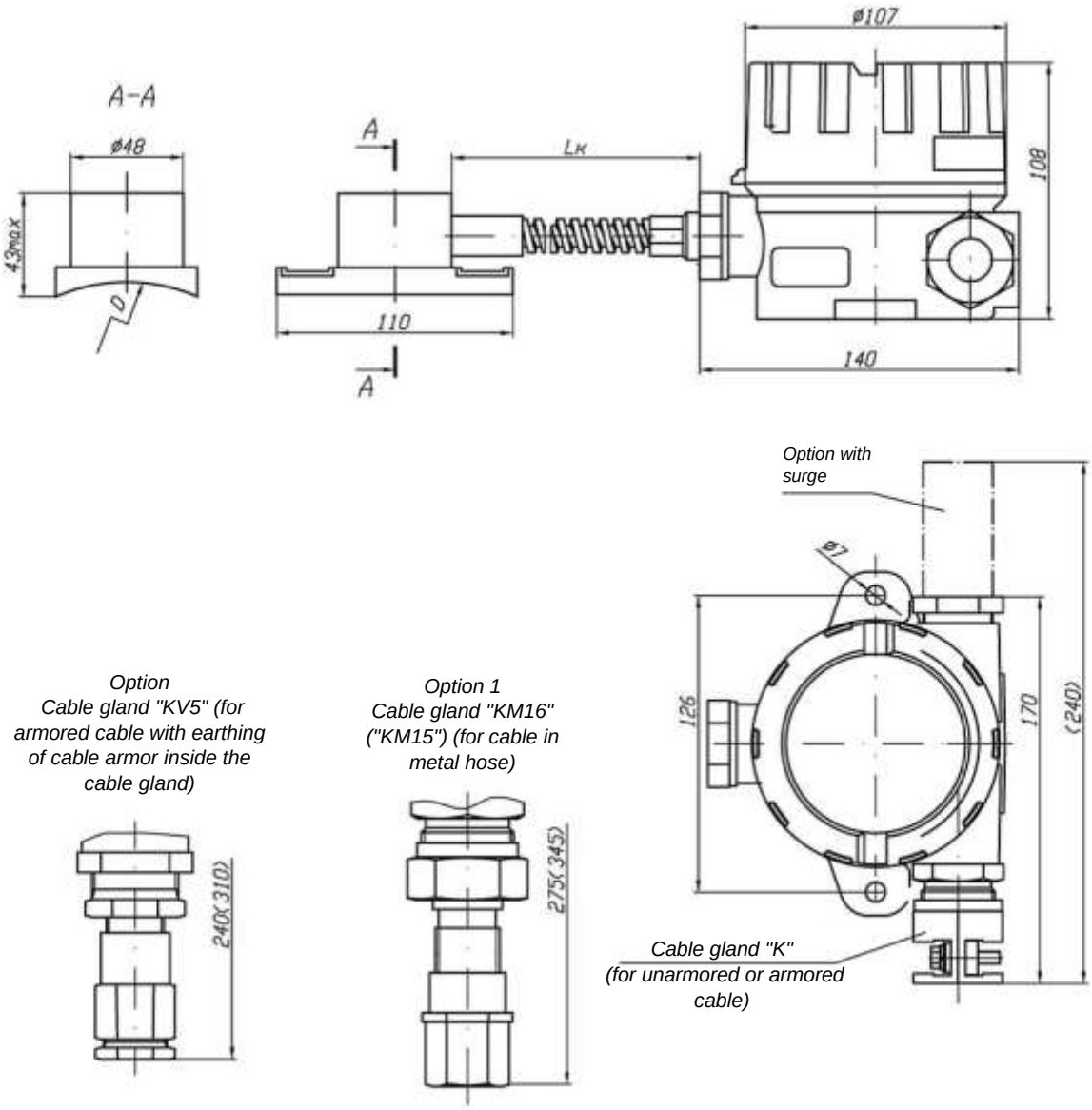

Cable length at standard supply L=3 m

Figure C.2 – Body-mounted resistive temperature transducer

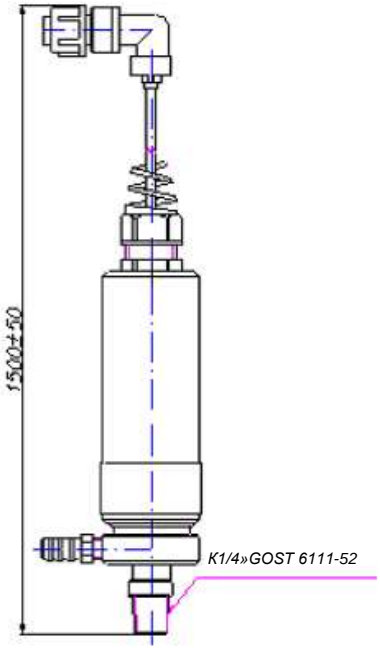

Figure C.3 – Excess pressure detector DI-017
KRAU5.183.017, KRAU5.183.017-01, KRAU5.183.017-02, KRAU5.183.017-03
and absolute pressure detector DA-018
KRAU5.183.018, KRAU5.183.018-01, KRAU5.183.018-02

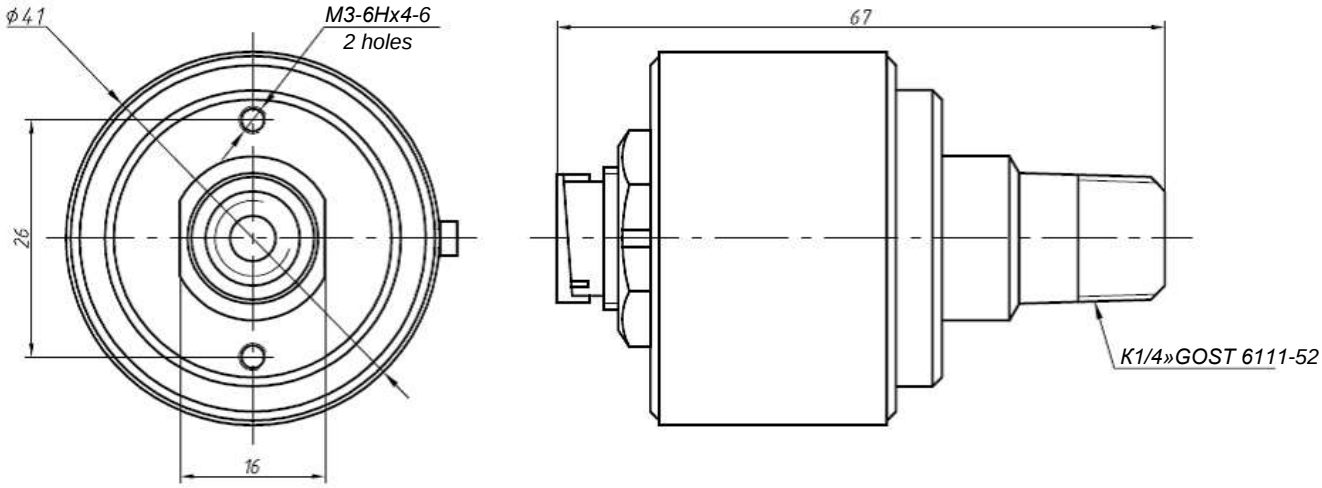

Figure C.4 – Absolute pressure detectors DAD-004
VMPL5.183.004, VMPL5.183.004-01, VMPL5.183.004-02,
VMPL5.183.004-03, VMPL5.183.004-04, VMPL5.183.004-05

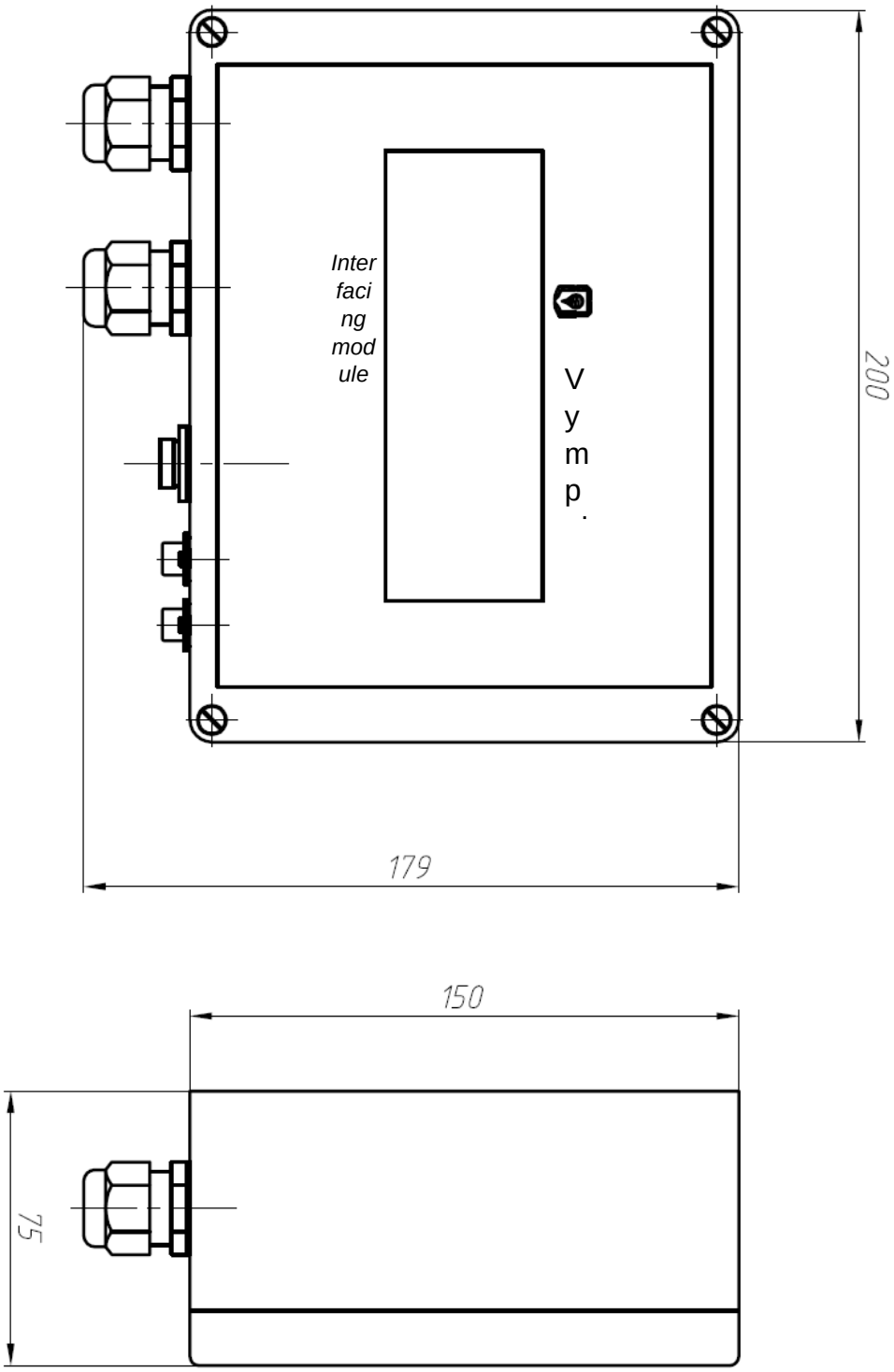

Figure C.5 – Interfacing module VMPL3.622.003

Appendix D

(reference)

Assembly of device components. Composition of installation kits

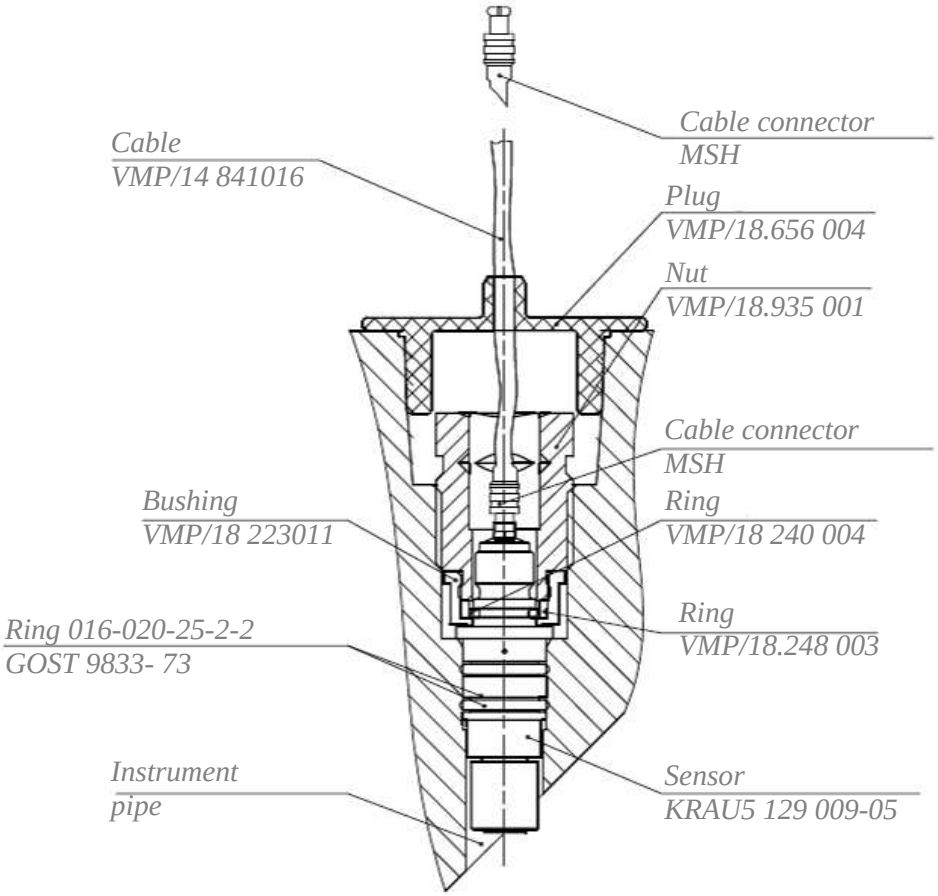

Figure D.1 – Installation of piezoelectric sensors

Table D.1 – DPE VMPL4.078.007 installation kit

Designation	Name	Qty	Note
	Details		
VMPL8.223.011	Bushing	1	
VMPL8.240.003	Ring	1	
VMPL8.240.004	Ring	1	
VMPL8.935.001	Nut	1	

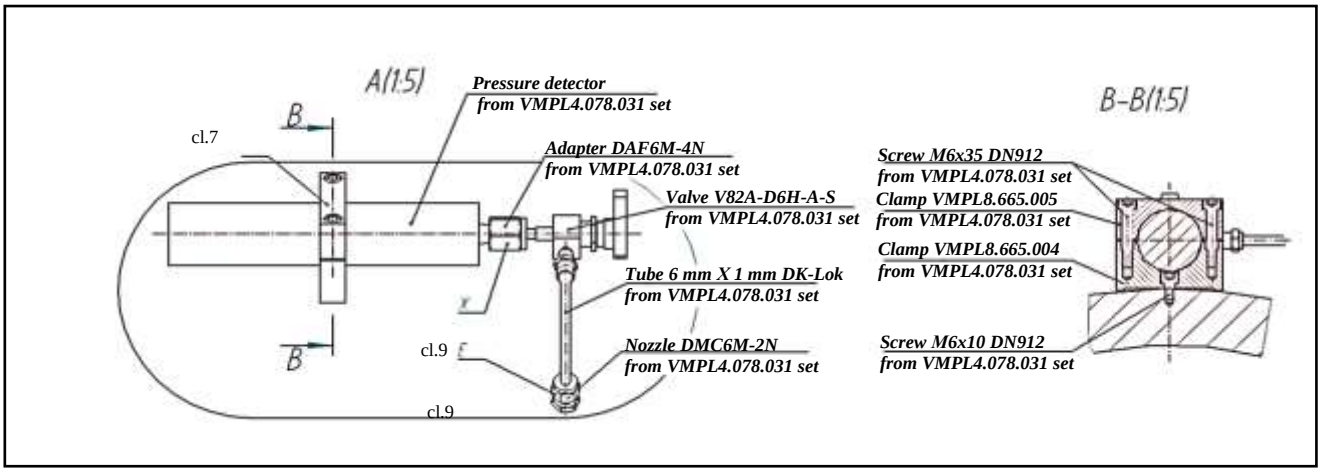

Figure D.2 – Installation of pressure detectors

Table D.2 – Installation kit for pressure detectors VMPL4.078.031

Designation	Name	Qty	Note
	Details		
VMPL8.665.004	Clamp	1	
VMPL8.665.005	Clamp	1	
	Standard items		
	Screw M6x10 A2 DIN912	1	
	Screw M6x35 A2 DIN912	2	
	Other items		
V82A-D6M-A-S	Valve	1	
DAF6M-4N	Adapter	1	
DMC6M-2N	Nozzle	1	
	Materials		
	Seamless pulse tube	1	
	L=300 h16		

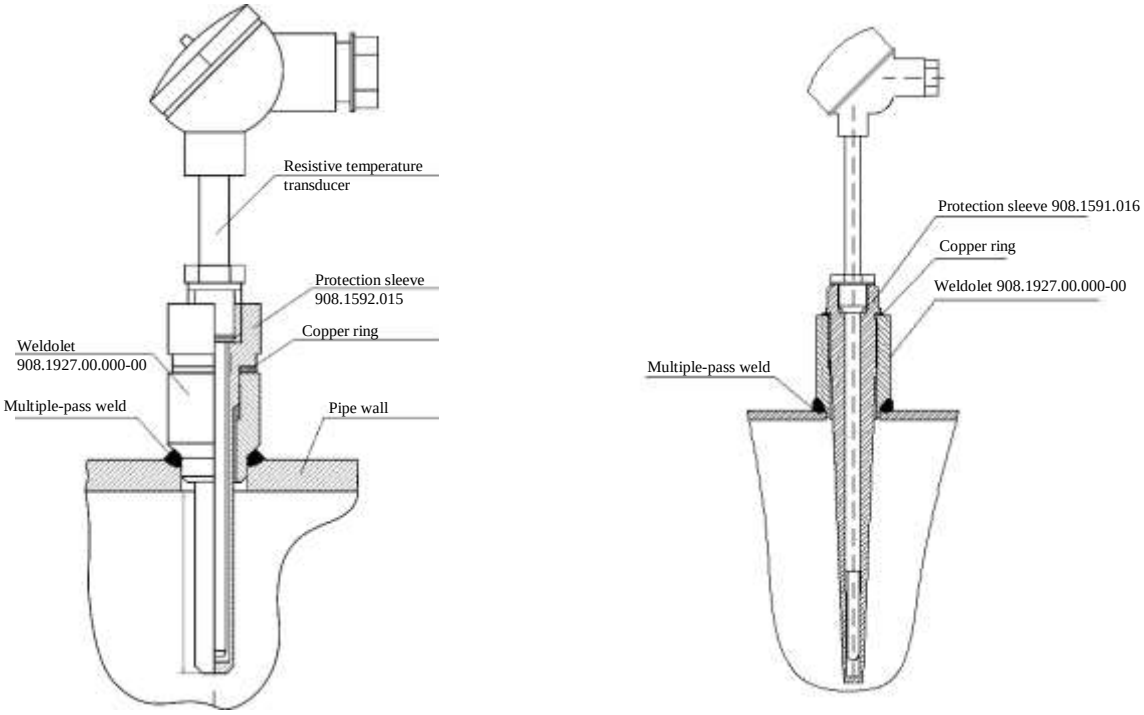

a) Installation of a resistive temperature transducer – submerged section length: 80, 100, 160, 630 mm

b) Installation of a resistive temperature transducer – submerged section length: 250, 300 mm

Figure D.3 – Installation of a submerged resistive temperature transducer on the instrument pipe

Table D.3 – Installation kit for submerged resistive temperature transducer

Maximum velocity of gas flow, m/s	Maximum operating pressure, MPa	Inner pipe diameter, mm	Recommended length of the submerged section (L)* of the resistive temperature transducer, mm	Weldolet design**	Protection sleeve design**
40	25	100-120	80	908.1927.00.000-00	908.1592.015-39
40	25	100-190	100	908.1927.00.000-00	908.1592.015-40
40	25	180-390	160	908.1927.00.000-00	908.1592.015-01
40	25	320-690	250	908.1927.00.000-06	908.1592.016-08
40	25	420-900	320	908.1927.00.000-06	908.1591.016-09
5	25	850-1900	630	908.1927.00.000-00	908.1591.015-07

*Recommended length of the submerged section (L) of the resistive temperature transducer is given with weldolet height of 40 mm.
**Design of protection sleeves and weldolets manufactured by Research and Production Company Etalon. Supply of installation kits by other manufacturers are accepted if they meet the requirements of the Customer's data sheet.

The installation kit for the resistive temperature transducer consists of a weldolet for installation of a protection sleeve, a copper ring and a protection sleeve that are selected based on maximum gas flow velocity, maximum operating pressure and inner pipe diameter (i.e. in accordance with this Customer's data sheet).

Appendix E

(reference)

Installation dimensions and complete set options for ultrasonic measurement system Vympel-500, version 01

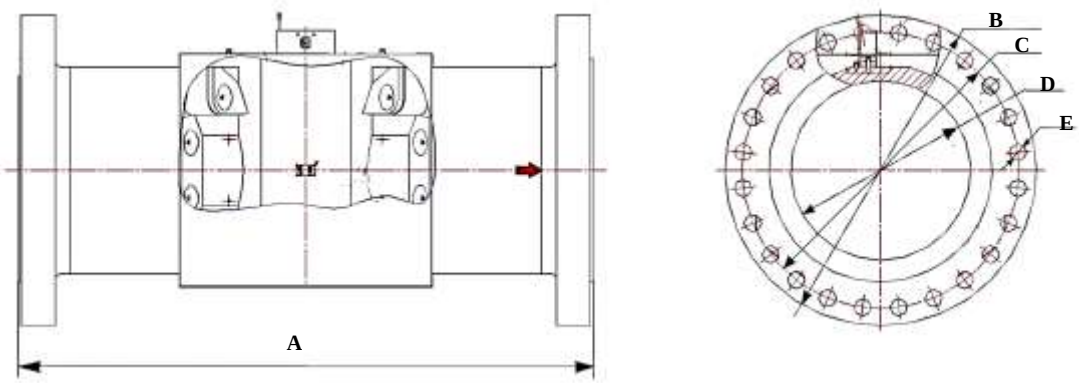

Figure E.1

Table E.1 – Flanged measuring sections (flange type ANSI/ASME B16.5)

Nominal diameter mm/pressure MPa	Dimensions, mm					Weight, kg
	A	B	C	D	E	
DN150/10	450	356	292	154	28.5 (12 holes)	180
DN200/10	600	419	349	198	31.8 (12 holes)	270
DN300/10	900	558.8	489	298	35 (20 holes)	400
DN400/10	1200	685.8	603	373	41.2 (20 holes)	740
DN500/10	1500	813	724	470	45 (24 holes)	1200

Table E.2 –Straight inlet section (flange type ANSI/ASME B16.5)

Nominal diameter mm /pressure MPa	Dimensions, mm					Weight, kg
	A	B	C	D	E	
DN150/10	1500±3.1	356	292	154	28.5 (12 holes)	95
DN200/10	2000±3.7	419	349	198	31.8 (12 holes)	180
DN300/10	3000±5.4	560	489	298	35 (20 holes)	460
DN400/10	4000±6.6	685	603	373	41.2 (20 holes)	970
DN500/10	5000±8	813	723.9	470	44.5 (24 holes)	1700

Table E.3 – Straight outlet section (flange type ANSI/ASME B16.5)

Nominal diameter mm /pressure MPa	Dimensions, mm					Weight, kg
	A	B	C	D	E	
DN150/10	750±3.1	356	292	154	28.5 (12 holes)	80
DN200/10	1000±2.3	419	349	198	31.8 (12 holes)	140
DN300/10	1500±3.1	560	489	298	35 (20 holes)	330
DN400/10	2000±3.7	685	603	373	41.2 (20 holes)	680
DN500/10	2500±8	813	723.9	470	44.5 (24 holes)	1100

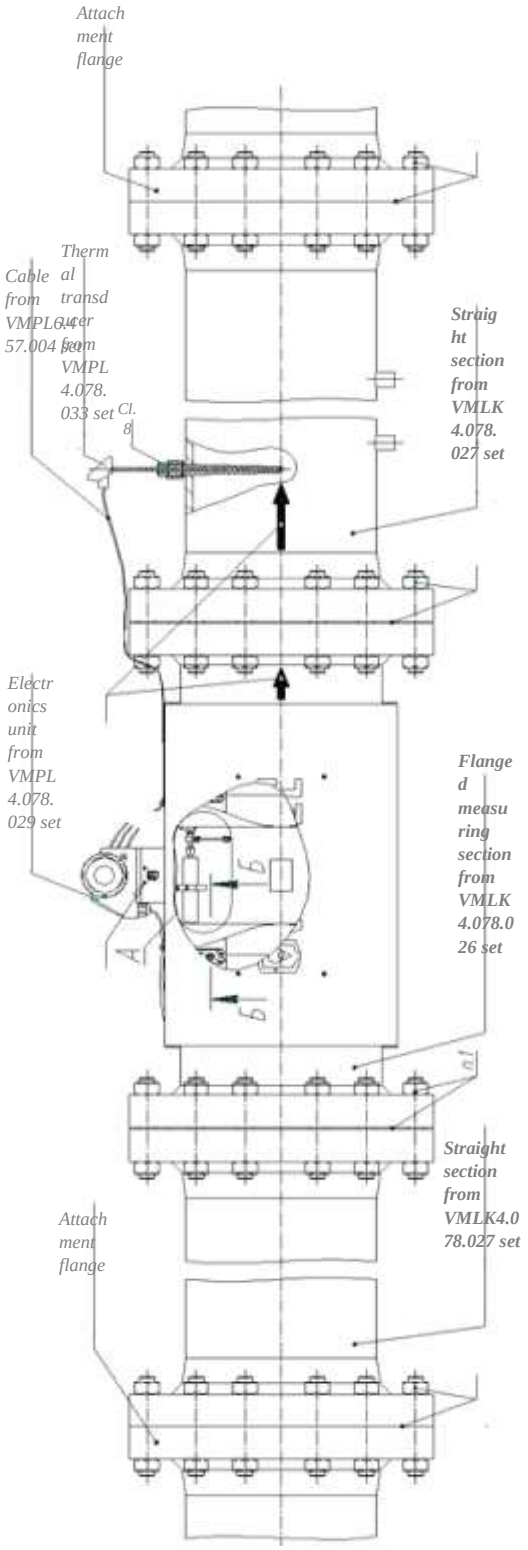

Figure E.2 – Installation drawing for ultrasonic measurement system Vympel-500

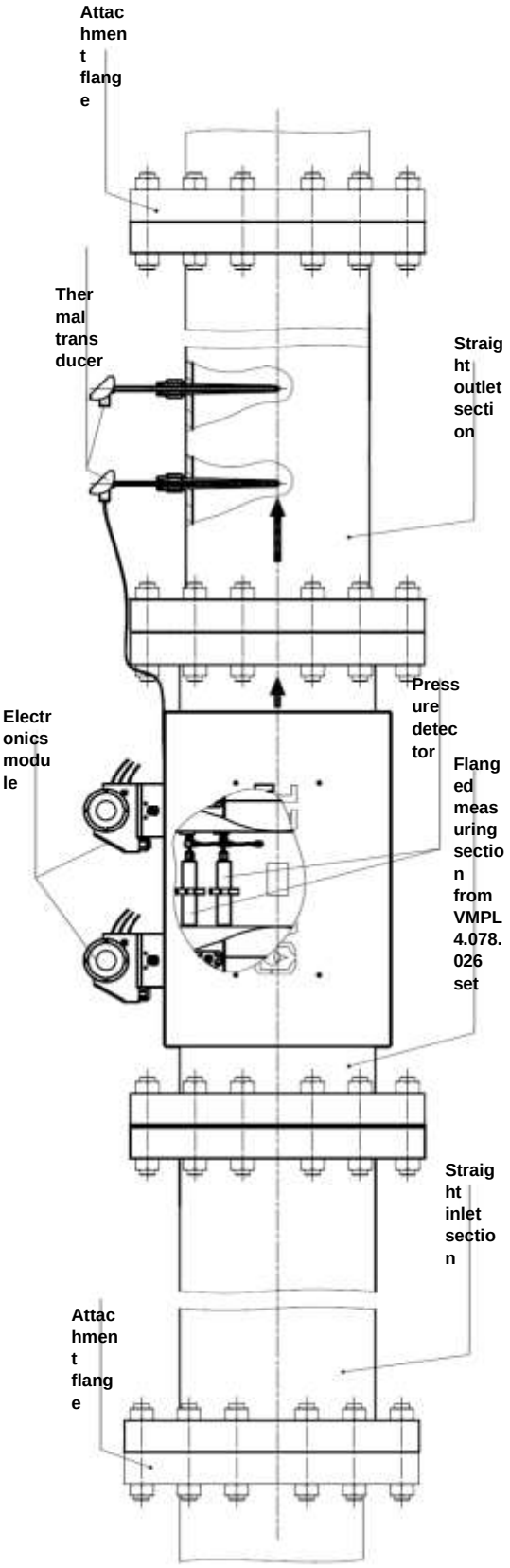

Figure E.3 – Ultrasonic measurement system Vympel-500 with two electronics units

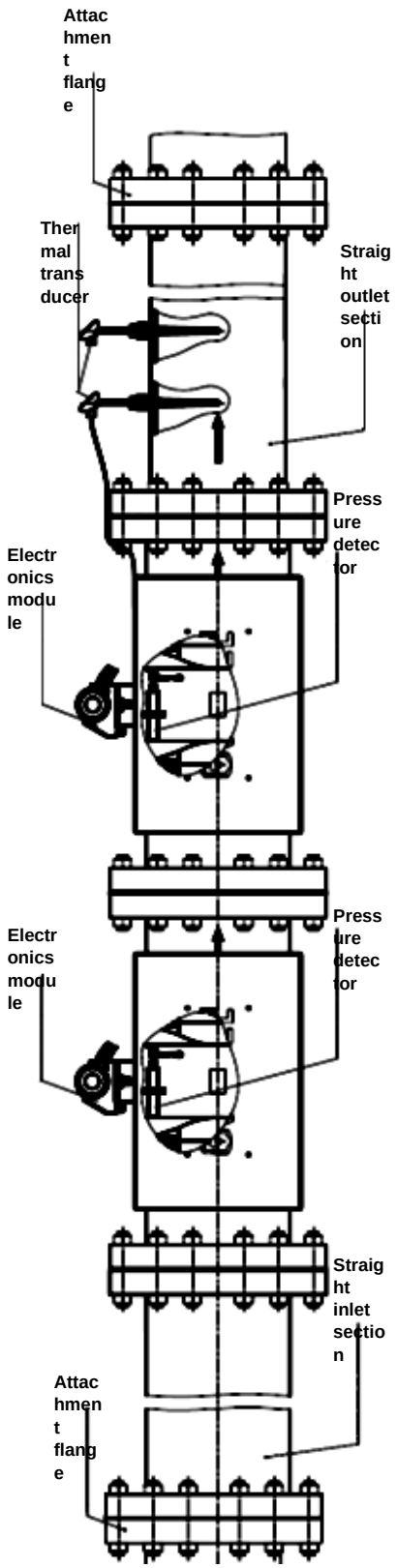

Figure E.4 – Ultrasonic measurement system Vympel-500 with two flanged measuring sections

Appendix F
(reference)
Connection options for the Vympel-500 ultrasonic measurement system
(electrical circuits)

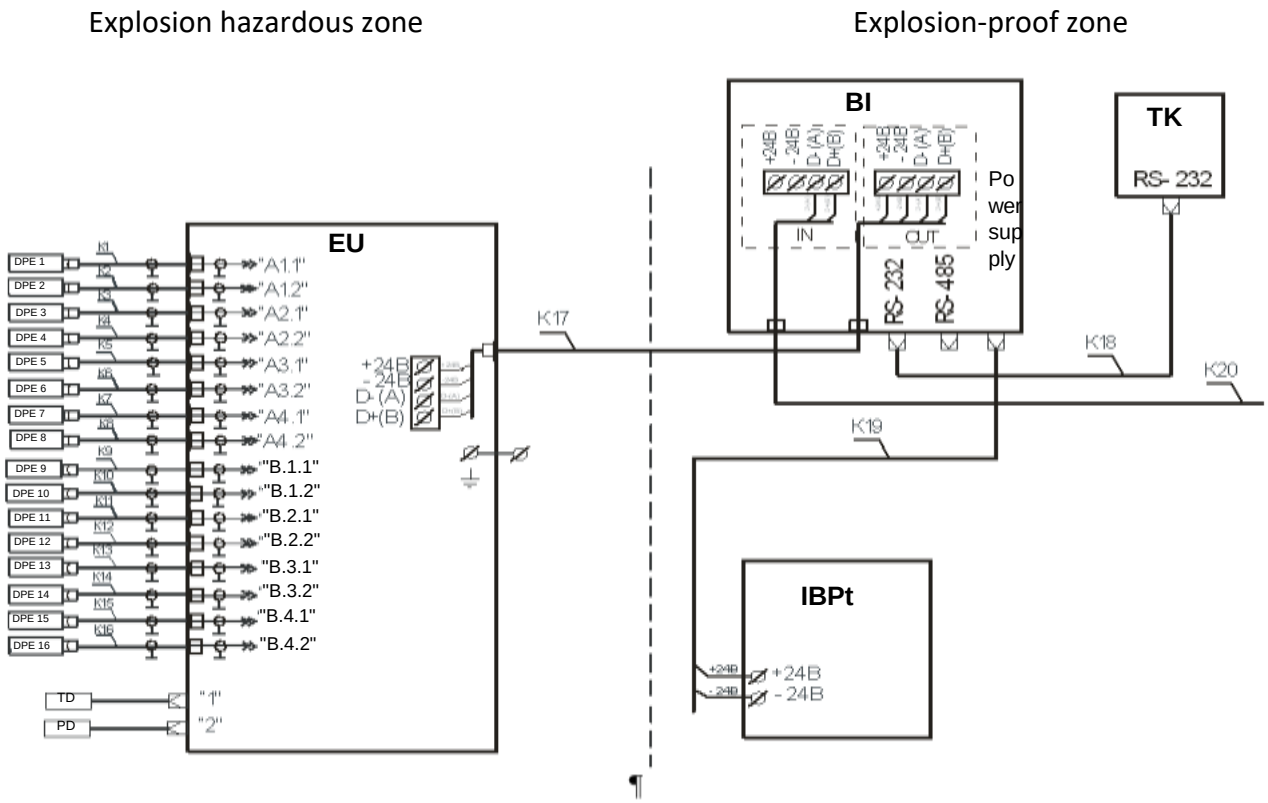

DPE 1–DPE 16 – piezoelectric sensors from sensor set VMPL4.078.098 (16 pcs.);
PD – pressure detector from pressure detector set VMPL4.078.030;
DT – submerged resistive thermal transducer from thermal transducer set VMPL4.078.033;
BI – interface unit VMPL3.622.003;
EU – electronics unit VMPL3.857.001;
TK – process computer;
UPS – uninterruptible power supply Shtil PS2405D;
K1–K16 – cables VMPL4.841.016-XX from cable set VMPL4.078.039, (16 pcs.);
K17 – cable DMX514;
K18 – cable VMPL4.841.071;
K19 – cable VMPL4.841.072;
K20 – data transfer cable (supplied by the Customer).

Figure F.1 – Connection diagram for 16 sensors

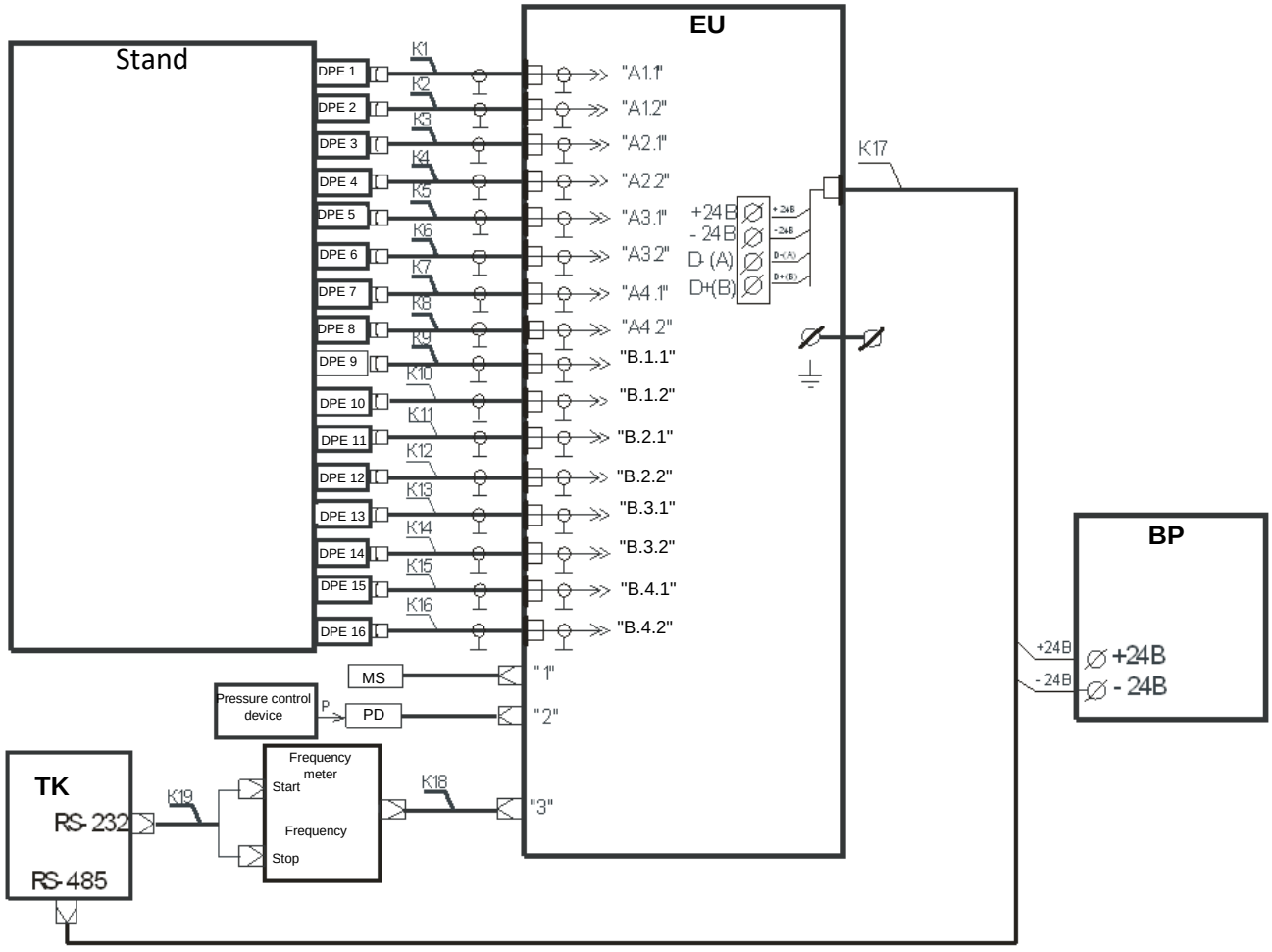

DPE 1–DPE 16 – piezoelectric sensors from sensor set VMPL4.078.028 (16 pcs.);
PD – pressure detector from pressure detector set VMPL4.078.030;
Pressure control device — reference pressure control device;
MS – resistor bank P4831;
EU – electronics unit VMPL3.857.001;
TK – process computer;
BP – mains supply source DRAN30-24;
K1–K16 – cables VMPL4.841.016-XX from cable set VMPL4.078.039, (16 pcs.);
K17 – cable DMX514;
K18 – cable VMPL4.841.073;
K19 – cable VMPL4.841.074.

Figure F.2 – Connection diagram for inspection

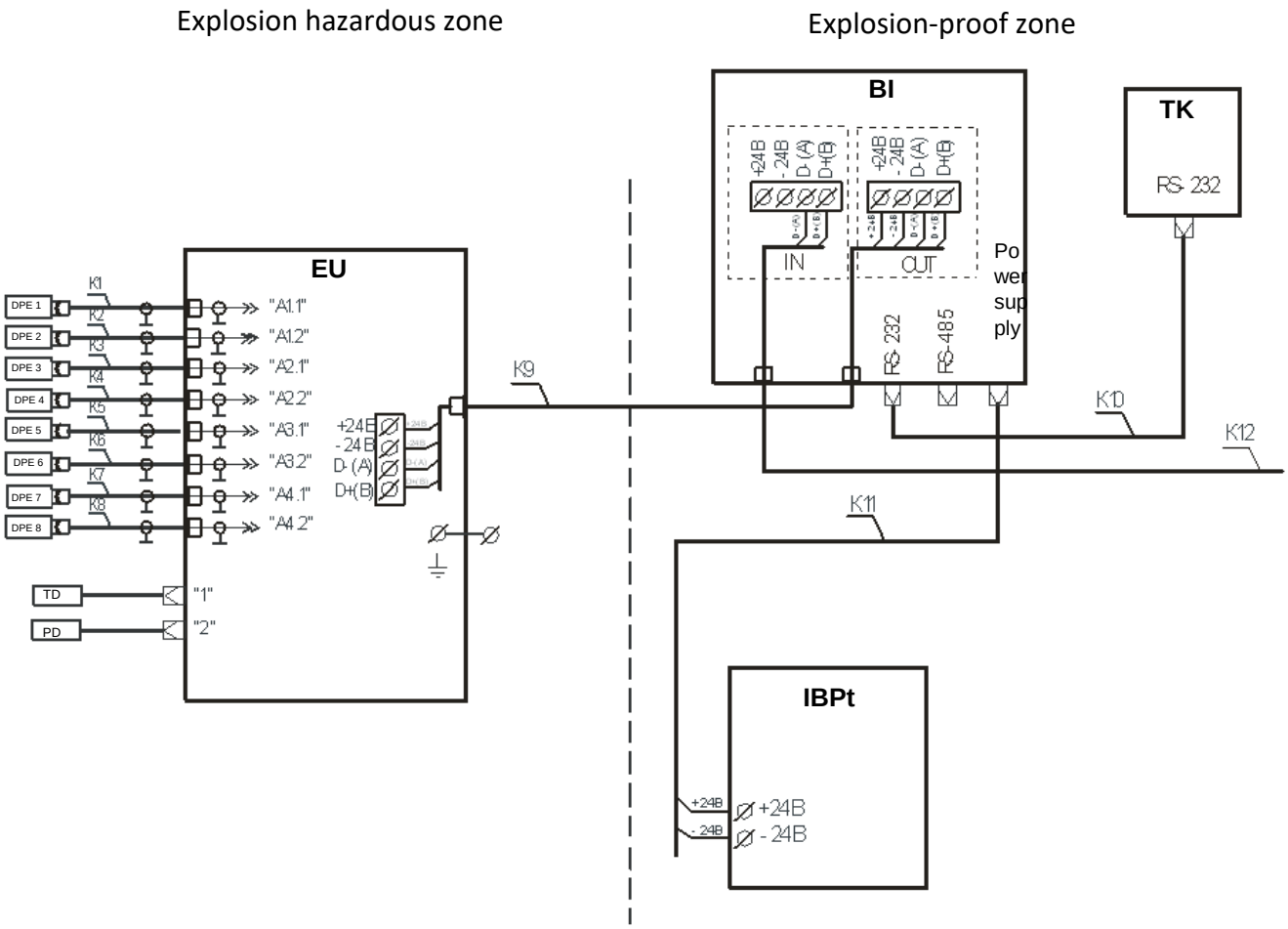

DPE 1–DPE 8 – piezoelectric sensors from sensor set VMPL4.078.098 (8 pcs.);
PD – pressure detector from pressure detector set VMPL4.078.030;
DT – submerged resistive thermal transducer from thermal transducer set VMPL4.078.033;
BI – interface unit VMPL3.622.003;
EU – electronics unit VMPL3.857.001;
TK – process computer;
UPS - uninterruptible power supply Shtil PS2405D;
K1–K8 – cables VMPL4.841.016-XX from cable set VMPL4.078.039, (8 pcs.);
K9 – cable DMX514;
K10 – cable VMPL4.841.071;
K11 – cable VMPL4.841.072;
K12 – data transfer cable (supplied by the Customer).

Figure F.3 – Connection diagram for 8 sensors

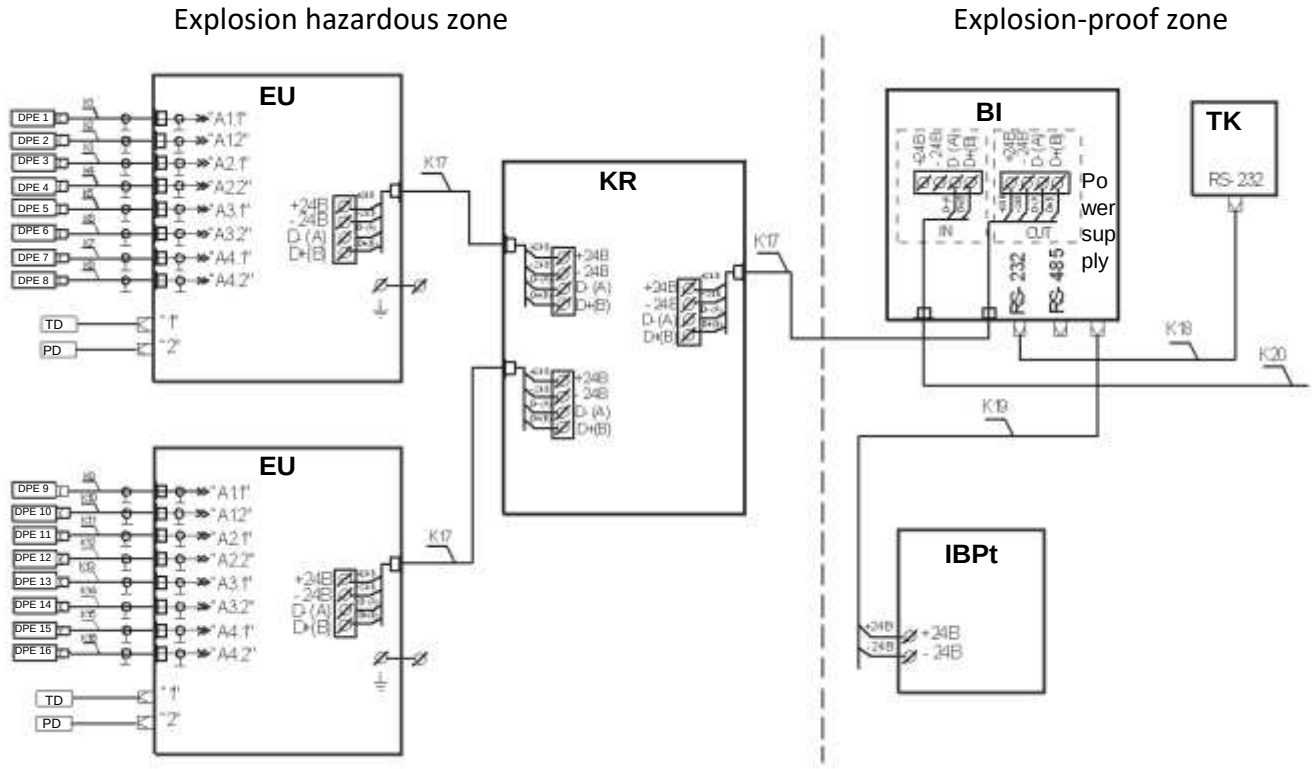

DPE 1–DPE 16 – piezoelectric sensors from sensor set VMPL4.078.098 (16 pcs.);
PD – pressure detector from pressure detector set VMPL4.078.030;
DT – submerged resistive thermal transducer from thermal transducer set VMPL4.078.033;
BI – interface unit VMPL3.622.003;
EU – electronics unit VMPL3.857.001;
TK – process computer;
UPS – uninterruptible power supply Shtil PS2405D;
KR – junction box KP-002-01;
K1–K16 – cables VMPL4.841.016-XX from cable set VMPL4.078.039, (16 pcs.);
K17 – cable DMX514;
K18 – cable VMPL4.841.071;
K19 – cable VMPL4.841.072;
K20 – data transfer cable (supplied by the Customer).

Figure F.4 – Connection diagram for 16 sensors connection to two units

(reference)

Tables of connectors

G.1 - Tables of connectors and electrical parameters of circuits of VMPL3.857.001 electronics unit connectors

Table G.1.1 – Connectors XW1–XW16 for connecting piezoelectric sensors A1–A16

Cont.	Name	Circuit characteristics
1	Sensor	Input signal, $U_{max} \leq 80$ V, $I_{max} \leq 60$ mA,
2	Common	

Table G.1.2 – Resistive thermal transducer connector 1 (DT)

Cont.	Name	Circuit characteristics
1, 2	Output + DT	Input circuit $U_{in} \leq 3.6$ V, $I_{in} \leq 0.01$ mA
3, 4	Output – DT	Input circuit $U_{in} \leq 3.6$ V, $I_{in} \leq 0.01$ mA
5	Common TD	

Table G.1.3 – Pressure detector connector 2 (DD)

Cont.	Name	Circuit characteristics
1	Test PD	Output signal, $U_{max} \leq 3.6$ V, $I_{max} \leq 10$ mA
2	Reset PD	Output signal, $U_{max} \leq 3.6$ V, $I_{max} \leq 10$ mA
3	RXD PD	Output signal, $U_{max} \leq 3.6$ V, $I_{max} \leq 10$ mA
4	TXD PD	Input signal, $U_{max} \leq 3.6$ V, $I_{max} \leq 10$ mA
5	+3.2 V	Power, $U_{max} \leq 3.6$ V, $I_{max} \leq 50$ mA, $C_{heat} \leq 10$ µF, $L_{heat} = 0$
6	GND	
7	RST 1	Programming, $U_{max} \leq 3.6$ V, $I_{max} \leq 10$ mA, $C_{heat} = 0$, $L_{heat} = 0$

Table G.1.4 – External circuits connector 3

Cont.	Name	Circuit characteristics
1, 2	FREQ	Output circuit, open collector, $C_i \leq 0.1$ µF, $L_i \leq 0.1$ mH, allowable voltage from an external source Umax ≤ 15 V, Imax ≤ 10 mA
3, 4	GND1	

Table G.1.5 – Clip connector XS1 for power networks and RS-485 interface

Cont.	Name	Circuit characteristics
1	+24V	Power 21–28 V
2	–24V	
3	A_485	RS-485 interface
4	B_485	

G.2 Electrical parameters of the circuits of devices connected to VMPL3.857.001 electronics unit

connectors

Table G.2.1 – Parameters of piezoelectric sensors connected to XW1–XW16 connectors of VMPL3.857.001 electronics unit

Cont.	Name	Circuit characteristics
1	Sensor	Input circuit $C_i \leq 0.01$ μF, $L_i \leq 0.1$ mH, $R_i \leq 1$ MOhm; $U_{in} \leq 60$ V; $I_{in} \leq 60$ mA
2	Common	

Table G.2.2 – Parameters of resistive thermal transducer connected to connector 1 (DT) of VMPL3.857.001 electronics unit

Cont.	Name	Circuit characteristics
1, 2	1 TSM output	Direct-current resistance from 30 to 200 Ohm
3, 4	2 TSM output	

Parameters of communication cable between the resistive thermal transducer and VMPL3.857.001 electronics unit:
Cable length is 15 m maximum;
$C_{cable} \leq 0.1$ μF, $L_{cable} \leq 0.1$ mH.

Table G.2.3 – Parameters of pressure detector connected to connector 2 **(PD)** of VMPL3.857.001 electronics unit

Cont.	Name	Circuit characteristics
1	Test PD	Input signal, $U_{max} \leq 3.6$ V, $I_{max} \leq 1$ mA
2	Reset PD	Input signal, $U_{max} \leq 3.6$ V, $I_{max} \leq 1$ mA
3	RXD PD	Input signal, $U_{max} \leq 3.6$ V, $I_{max} \leq 1$ mA
4	TXD PD	Output signal, $U_{max} \leq 3.6$ V, $I_{max} \leq 10$ mA
5	+3.2 V	Power, $U_{max} \leq 3.6$ V, $I_{max} \leq 50$ mA, $C_{heat} \leq 10$ μF, $L_{heat} = 0$
6	GND	
7		Programming, $U_{max} \leq 3.6$ V, $I_{max} \leq 10$ mA, $C_{heat} = 0$, $L_{heat} = 0$

List of Abbreviations

EU – electronics unit;
PD – pressure detector;
DN – nominal diameter;
DPE – piezoelectric sensor;
TD – temperature detector;
UPS – uninterruptible power supply;
IU – flange-less measuring section;
MP – inspection procedure;
QC – quality control department;
PC – personal computer;
PNR – commissioning;
SW – software;
PU – straight section;
OI – Operating Instructions;
STM – telemechanics system;
TK – process computer;
TO – maintenance;
TS – thermal resistance;
TU – technical specifications;
FIU – flanged measuring section;
FO – form sheet;
WLHF – wide light hydrocarbon fraction.

Revision Record Sheet

Rev.	Page numbers				Total pages in the document	Doc. No.	Reference No. Of supporting document and date	Signature	Date
	Changed	Replaced	New	Deleted					